ERTEC® Ditch Guard™

Dimensions and Spacing

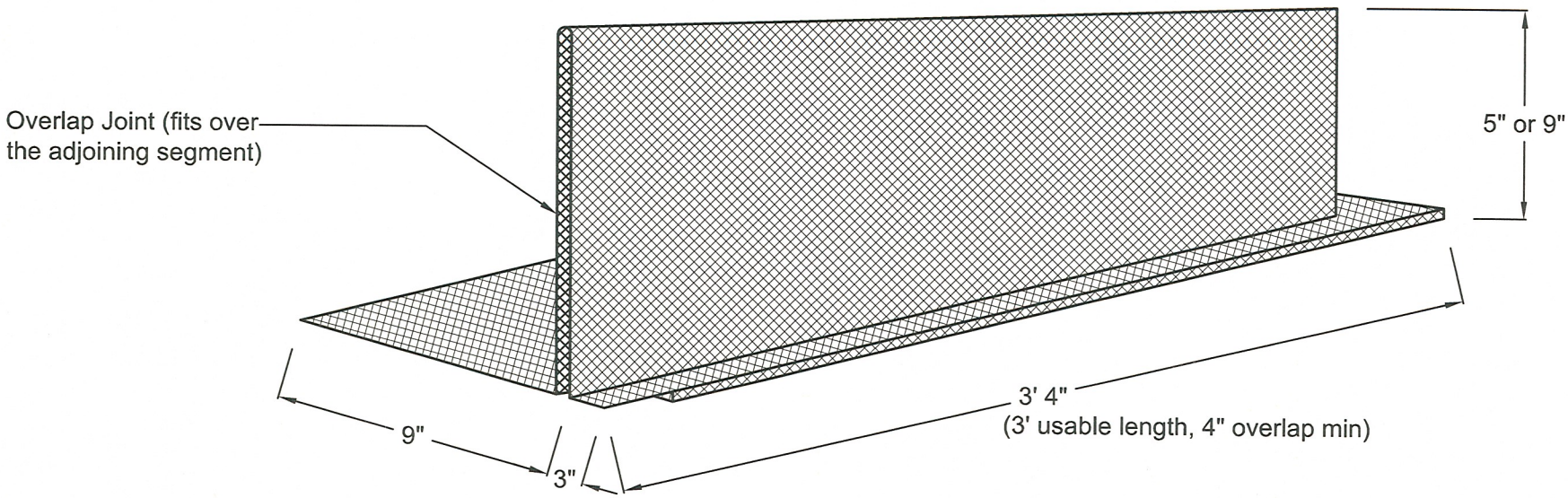

Design Spacing = Height (0.75 ft) / Gradient
(Example: 5% Gradient 0.75 ft / 0.05 = 15 ft)

Gradient	Ditch Guard 9" Spacing (ft)	Ditch Guard 5" Spacing (ft)
1%	76	42
2%	38	21
3%	25	14
4%	19	10
5%	15	8
6%	12	7
7%	11	6
8%	9	5

Specifications: ERTEC® Ditch Guard™ Permeable Berm

The permeable berms shall be Ditch Guard ™ as manufactured by ERTEC.

The berms shall have the following properties:
Length: 3' - 4" (3 feet usable)
Height: 0.75 feet, 0.42 feet
Polymer: HDPE
Integrated Filter Fabric for scour protection
Anchors: 6" Nail 60D Bright Common (4 upstream, 2 downstream)
Downstream Stakes: 1" x 1" x 18" or 1" x 2" x 18" (2 per segment)

** NOT TO SCALE **

U.S. and International Patents Apply
© 2009 ERTEC Environmental Systems

ERTEC Environmental Systems
http://www.ertecsystems.com/
1150 Ballena Blvd.
Suite 250
Alameda, CA 94501
P. 866-521-0724
F. 510-521-3972

File Name: ERTEC - Installation Details - Ditch Guard.dwg
Layout Name: P1 Dimensions and Spacing
Default Print Size: 8.5" x 11"

ERTEC® Ditch Guard™

Installation Details

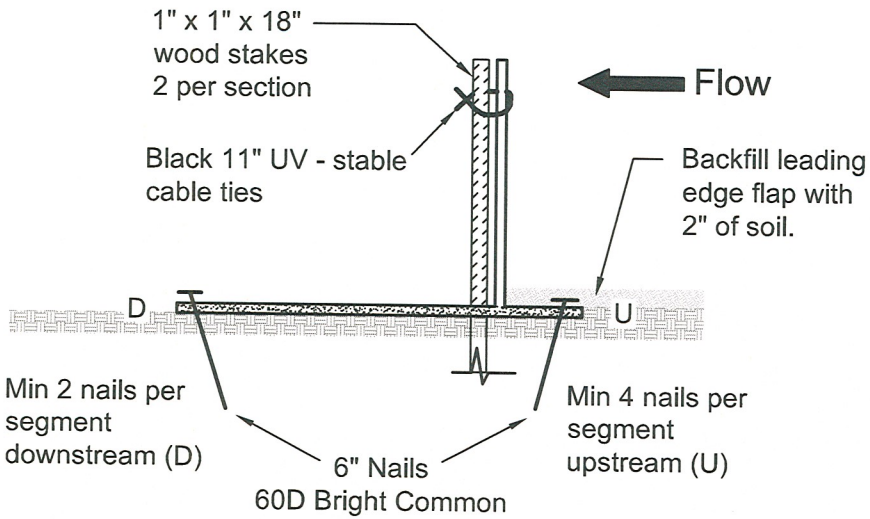

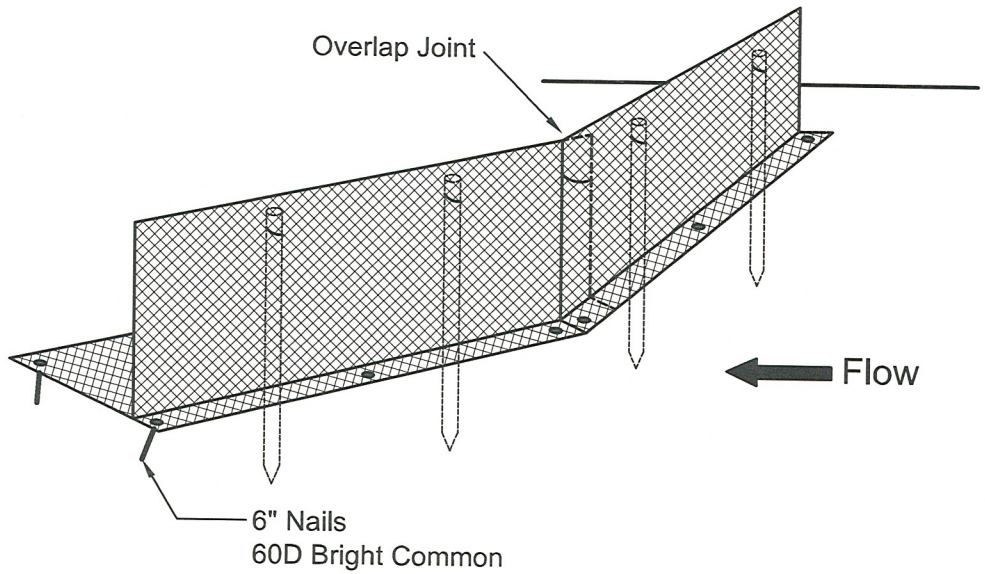

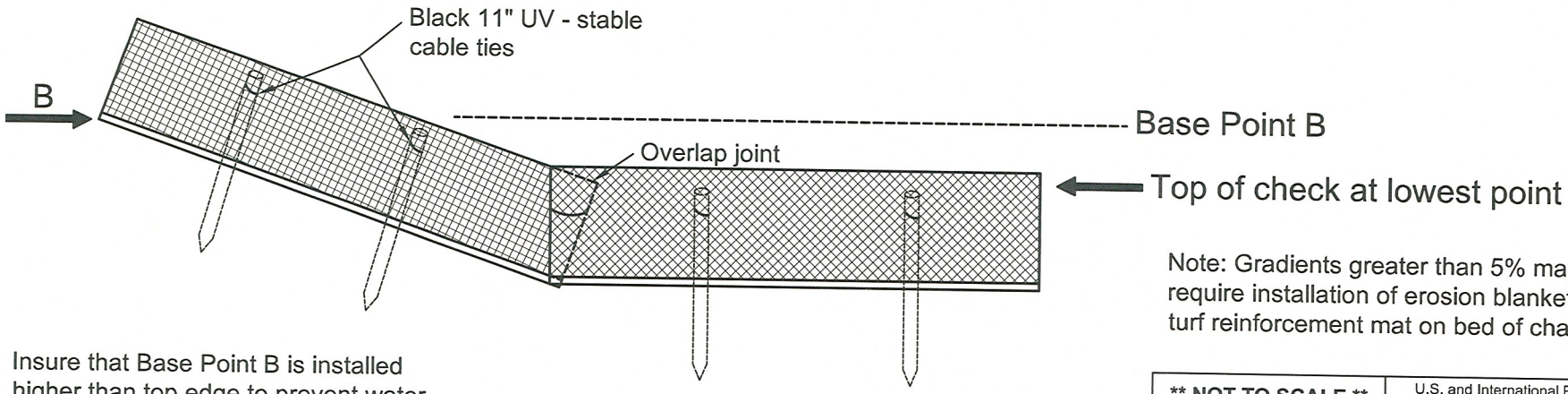

Note: Gradients greater than 5% may require installation of erosion blanket or turf reinforcement mat on bed of channel

Insure that Base Point B is installed higher than top edge to prevent water flanking and ensure flow toward channel center.

** NOT TO SCALE **		U.S. and International Patents Apply © 2009 ERTEC Environmental Systems
ERTEC Environmental Systems http://www.ertecsystems.com/		File Name: ERTEC - Installation Details - Ditch Guard.dwg
1150 Ballena Blvd. Suite 250 Alameda, CA 94501	P. 866-521-0724 F. 510-521-3972	Layout Name: P2 Installation Details
		Default Print Size: 8.5" x 11" / Page: 2 of 3

ERTEC® Ditch Guard™

Contouring to fit change in grade angle

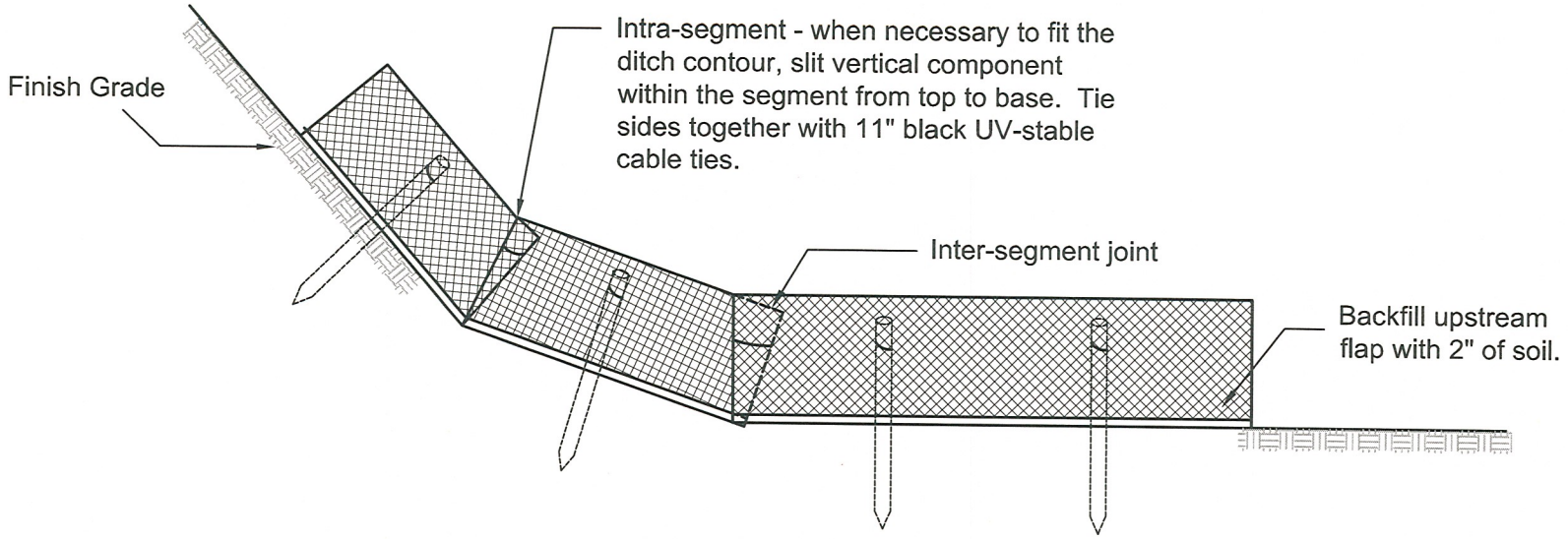

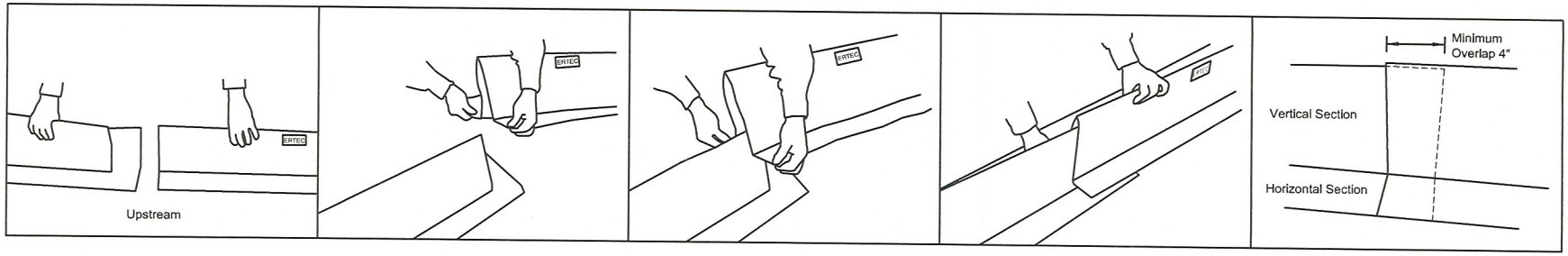

Important: All information, including illustrations, is believed to be reliable. Users, however, should independently evaluate the suitability of each project for their application. ERTEC Environmental Systems makes no warranties as to the accuracy of completeness of the information, and disclaims any liability regarding is use. ERTEC Environmental System's only obligations are those in the ERTEC Environmental Systems Standard Terms and Conditions of Sale for this product, and in no case will ERTEC Environmental Systems or its distributors be liable for any incidental indirect or consequential damages arising for the sale, resale, use or misuse of the product. Specifications are subject to change without notice. In addition, ERTEC Environmental Systems reserves the right to make changes, without notification to Buyer, to processing or materials that do not affect compliance with any applicable specification.

** NOT TO SCALE **

U.S. and International Patents Apply
© 2009 ERTEC Environmental Systems

ERTEC Environmental Systems
http://www.ertecsystems.com/
1150 Ballena Blvd.
Suite 250
Alameda, CA 94501
P. 866-521-0724
F. 510-521-3972

File Name: ERTEC - Installation Details - Ditch Guard.dwg
Layout Name: P3 Grade Angle
Default Print Size: 8.5" x 11"

ERTEC® S-Fence™

Details

Fence Height "X"	Filter Width "Y"
10"	9"
14"	12"
20"	18"

Key Benefits:

- Will not deteriorate or blow down
- Remove with minimal disturbance to landscaping
- Compact storage and transportation
- Long lasting (4+ years)
- High reusability
- Lets water flow off-site
- High sediment retention

Appropriate Applications:

- Base of stabilized slopes
- Job perimeters
- Alternative to silt fence

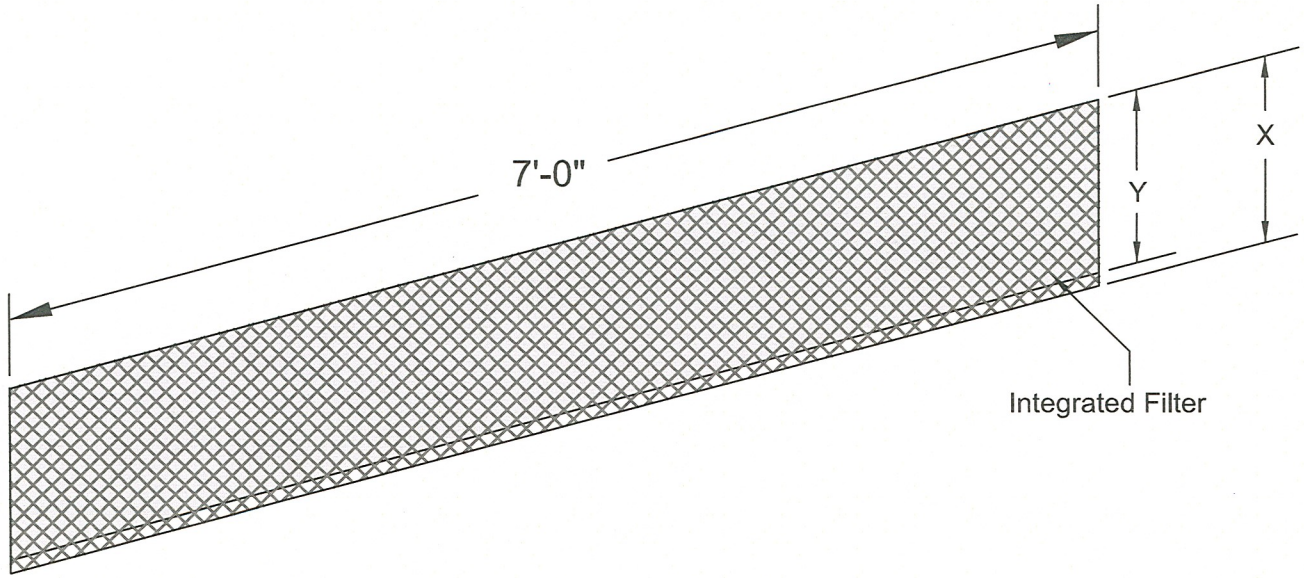

Purpose

S-Fence™ is used to filter sediment laden water and detain a high percentage of sediment and associated pollutants. The system reduces the velocity of water and allows it to spread and flow-through as lower velocity sheet flow. Flow-through discourages end-around flows, under and overflow. The system filters certain sized smaller particles. The filter develops a filter cake, which in turn filters smaller and smaller particles over time.

Design Criteria

For detailed product characteristics contact ERTEC Environmental Systems @ (866) 521-0724 or www.ertecsystems.com. The unit weight of the system is 0.30 lbs/ft (10"), 0.40 lbs/ft (14") and 0.62 lbs/ft (20"). For installation procedures, follow the instructions on the attached drawings. The last in-line S-Fence™ should be bent and dog-legged upslope to ensure sediment containment.

Maintenance

Inspect S-Fence™ when rain is forecast. Perform maintenance as needed or as required. Inspect S-Fence™ following rainfall events and at least daily during prolonged rainfall. Maintain S-Fence™ to provide an adequate sediment holding capacity. Sediment shall be removed when the sediment accumulation reaches 50% of the barrier height. Removed sediment should be incorporated in the project outside of concentrated flow paths. Remove S-Fence™ after the site has been stabilized.

** NOT TO SCALE **

U.S. and International Patents Apply
© 2009 ERTEC Environmental Systems

ERTEC Environmental Systems
http://www.ertecsystems.com/
1150 Ballena Blvd.
Suite 250
Alameda, CA 94501
P. 866-521-0724
F. 510-521-3972

File Name: ERTEC_Installation_Details_S-Fence.dwg
Layout Name: P1 Details
Default Print Size: 8.5" x 11"

ERTEC® S-Fence™
Installation Details

10" or 14", SF10 or SF14

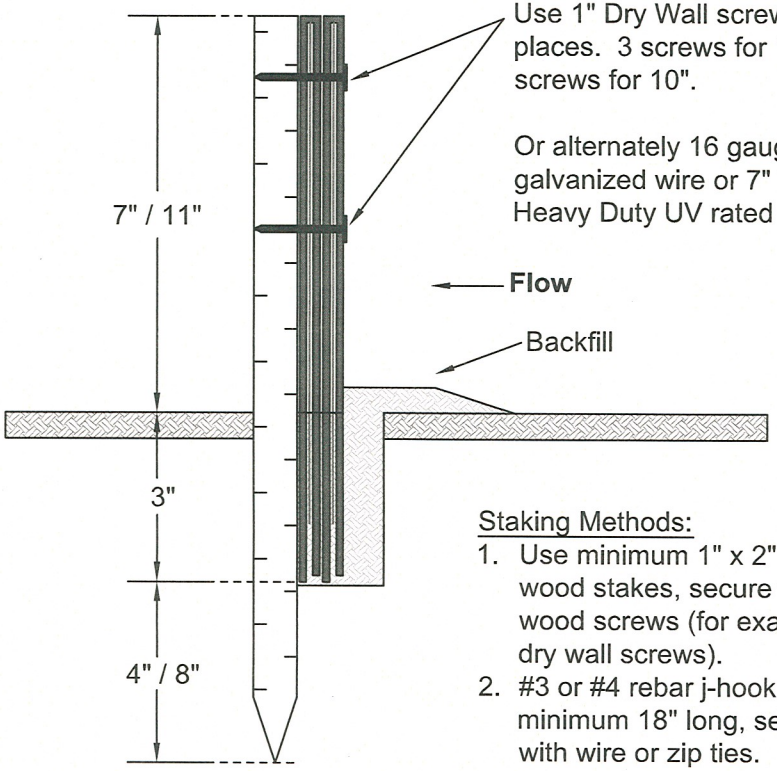

Staking Methods:
1. Use minimum 1" x 2" x 18" wood stakes, secure with wood screws (for example dry wall screws).
2. #3 or #4 rebar j-hook minimum 18" long, secure with wire or zip ties.

Notes:
1. Cut trench 1½" to 2" wide, 3" to 4" deep.
2. Install in slot against downstream side of trench wall, backfill the trench to grade level.
3. Overlap segments by at least 4". Install stakes on downstream side of segment overlaps.
4. Use 1" Dry Wall screws: 2 or 3 places. Or alternately 16 gauge galvanized wire or 7" Black Heavy Duty UV staple cable ties (zip ties) to tie segments together.

Notes:
1. Dog-leg at end-of-runs to contain sediment.
2. Install on same contour to limit scour and flow concentration. Dog-leg periodically if on down-hill run to minimize velocity scour.

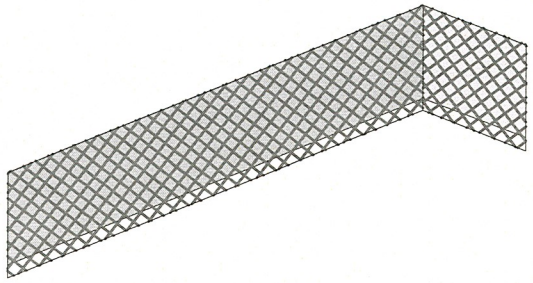

Staking Methods:
1. Wooden Stake: Use 1" x 2" x 18". One at each overlap or 80" apart.
2. #3 or #4 rebar j-hook minimum 18" long. Use galvanized wire or zip ties to tie segments to j-hook.

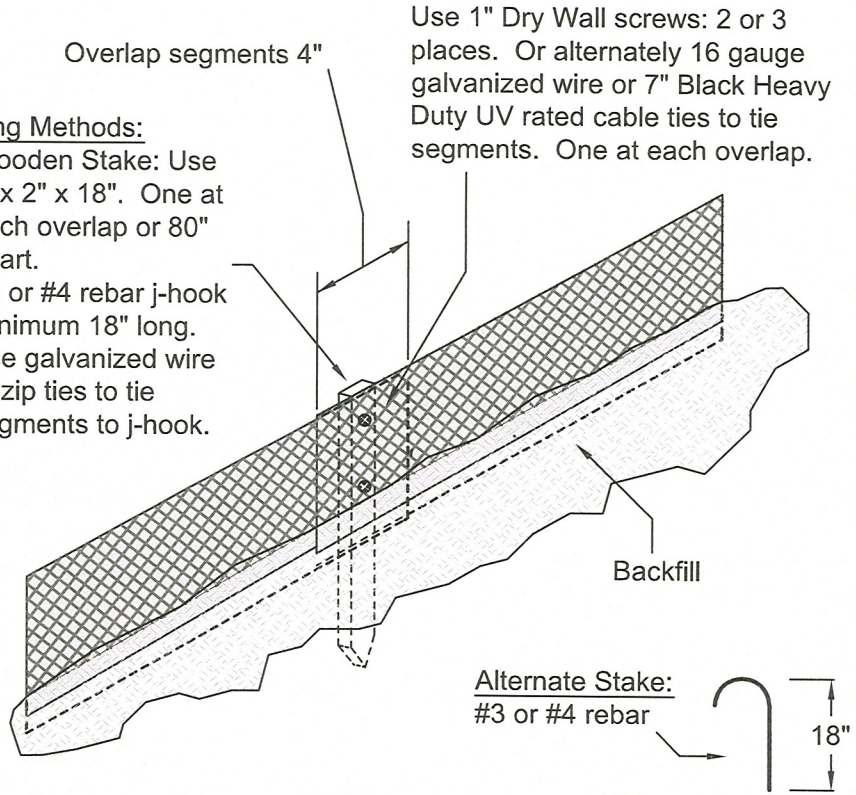

Important: All information, including illustrations, is believed to be reliable. Users, however, should independently evaluate the suitability of each project for their application. ERTEC Environmental Systems makes no warranties as to the accuracy of completeness of the information, and disclaims any liability regarding is use. ERTEC Environmental System's only obligations are those in the ERTEC Environmental Systems Standard Terms and Conditions of Sale for this product, and in no case will ERTEC Environmental Systems or its distributors be liable for any incidental indirect or consequential damages arising for the sale, resale, use or misuse of the product. Specifications are subject to change without notice. In addition, ERTEC Environmental Systems reserves the right to make changes, without notification to Buyer, to processing or materials that do not affect compliance with any applicable specification.

** NOT TO SCALE **

U.S. and International Patents Apply
© 2009 ERTEC Environmental Systems

ERTEC Environmental Systems
http://www.ertecsystems.com/
1150 Ballena Blvd.
Suite 250
Alameda, CA 94501
P. 866-521-0724
F. 510-521-3972

File Name: ERTEC_Installation_Details_S-Fence.dwg
Layout Name: P2 Installation Details
Default Print Size: 8.5" x 11"

ERTEC® S-Fence™
Installation Details

20", SF20

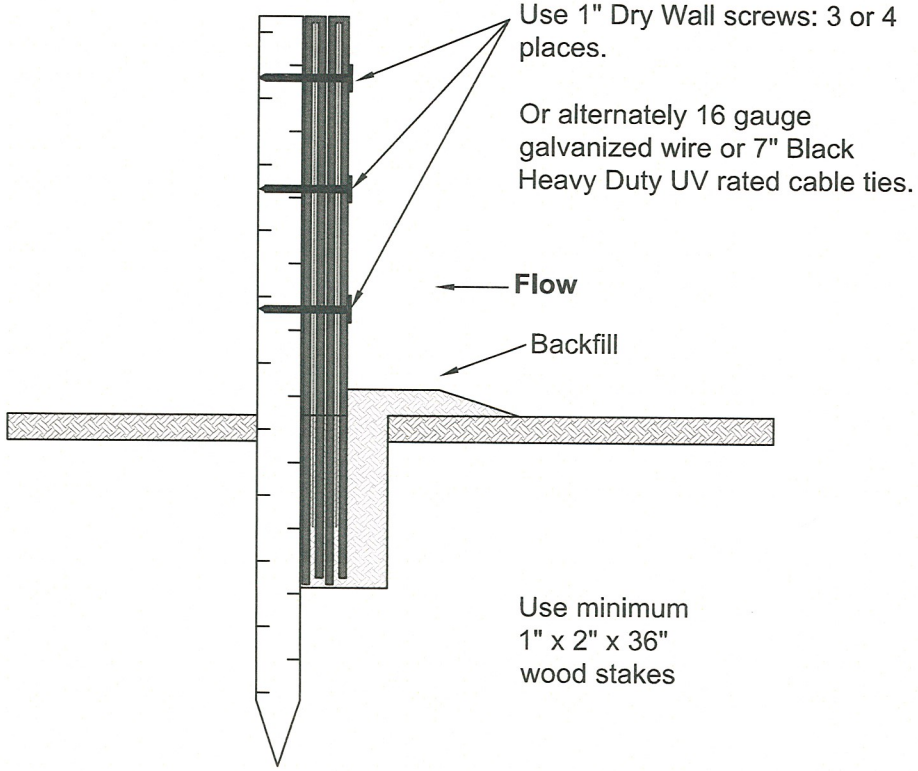

Notes:

1. Cut trench 1½" to 2" wide, 4" deep.
2. Install in slot against downstream side of trench wall, backfill the trench to grade level.
3. Overlap segments by at least 4". Install stakes at downstream side of segment overlaps and also one stake in between segments.
4. Use 1" Dry Wall screws: 3 or 4 places. Or alternately 16 gauge galvanized wire or 7" Black Heavy Duty UV staple cable ties (zip ties) to tie segments together.

Notes:

1. Dog-leg at end-of-runs to contain sediment.
2. Install on same contour to limit scour and flow concentration. Dog-leg periodically if on down-hill run to minimize velocity scour.

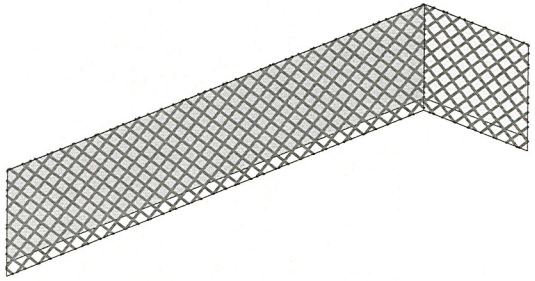

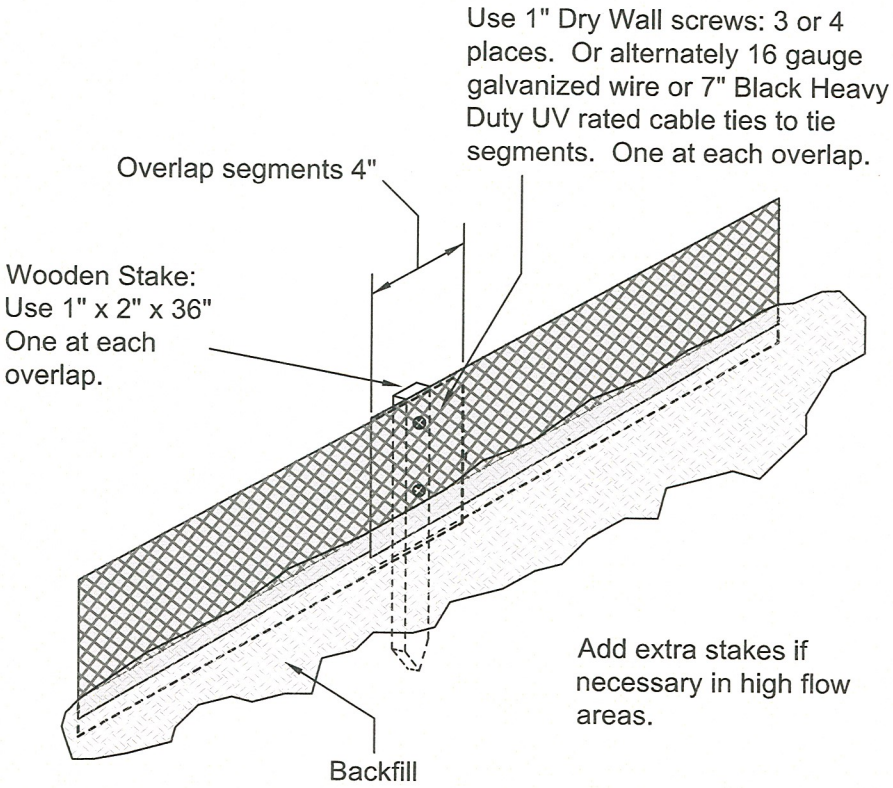

Important: All information, including illustrations, is believed to be reliable. Users, however, should independently evaluate the suitability of each project for their application. ERTEC Environmental Systems makes no warranties as to the accuracy of completeness of the information, and disclaims any liability regarding is use. ERTEC Environmental System's only obligations are those in the ERTEC Environmental Systems Standard Terms and Conditions of Sale for this product, and in no case will ERTEC Environmental Systems or its distributors be liable for any incidental indirect or consequential damages arising for the sale, resale, use or misuse of the product. Specifications are subject to change without notice. In addition, ERTEC Environmental Systems reserves the right to make changes, without notification to Buyer, to processing or materials that do not affect compliance with any applicable specification.

** NOT TO SCALE **

U.S. and International Patents Apply
© 2009 ERTEC Environmental Systems

ERTEC Environmental Systems
http://www.ertecsystems.com/
1150 Ballena Blvd.
Suite 250
Alameda, CA 94501
P. 866-521-0724
F. 510-521-3972

File Name: ERTEC_Installation_Details_S-Fence.dwg
Layout Name: P3 Installation Details
Default Print Size: 8.5" x 11"

ERTEC® S-Fence™

Application Detail - Installation next to perimeter fence

S-Fence™ Dimensions:
SF10 10" high x 7' long
SF14 14" high x 7' long
SF20 20" high x 7' long

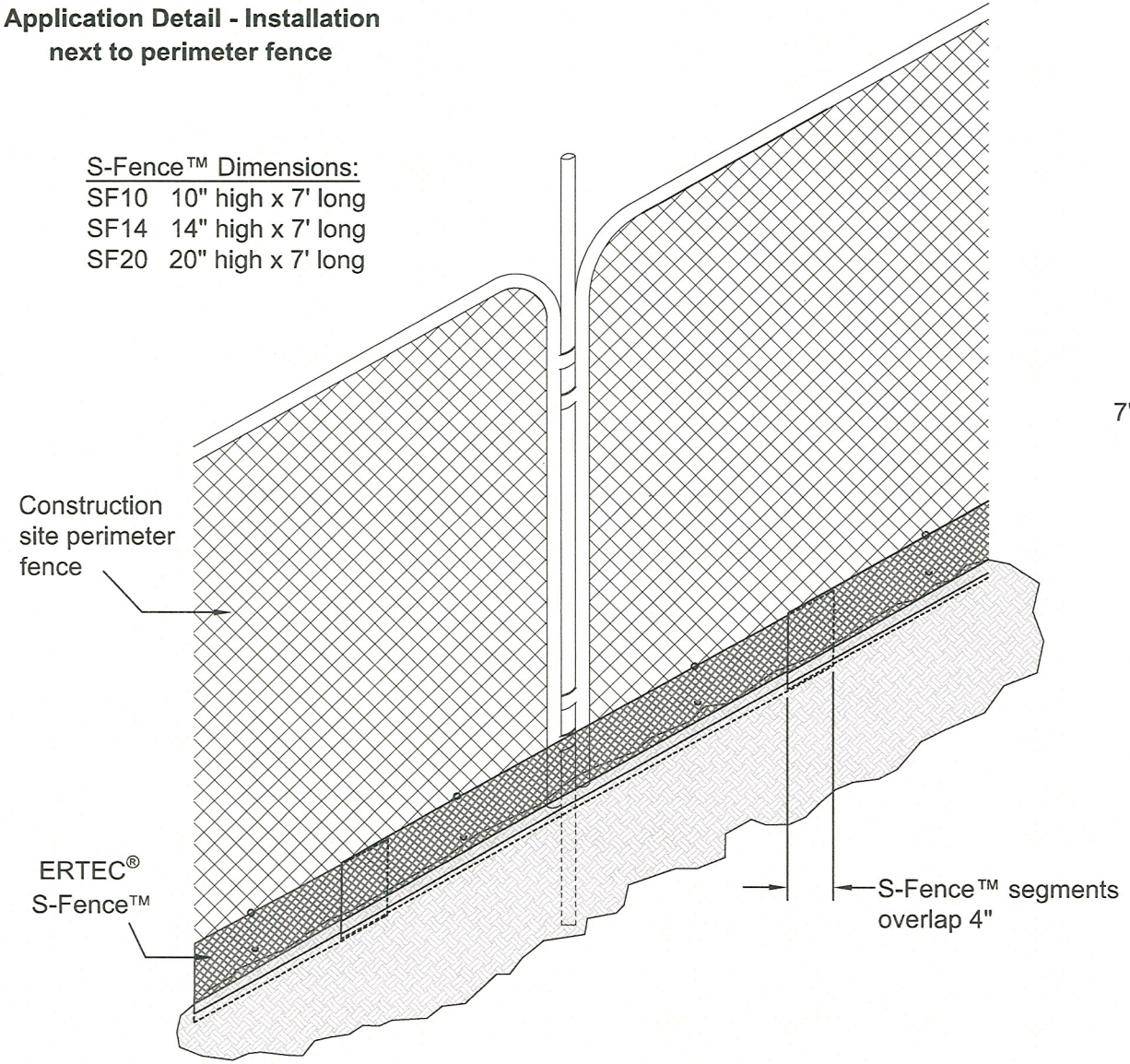

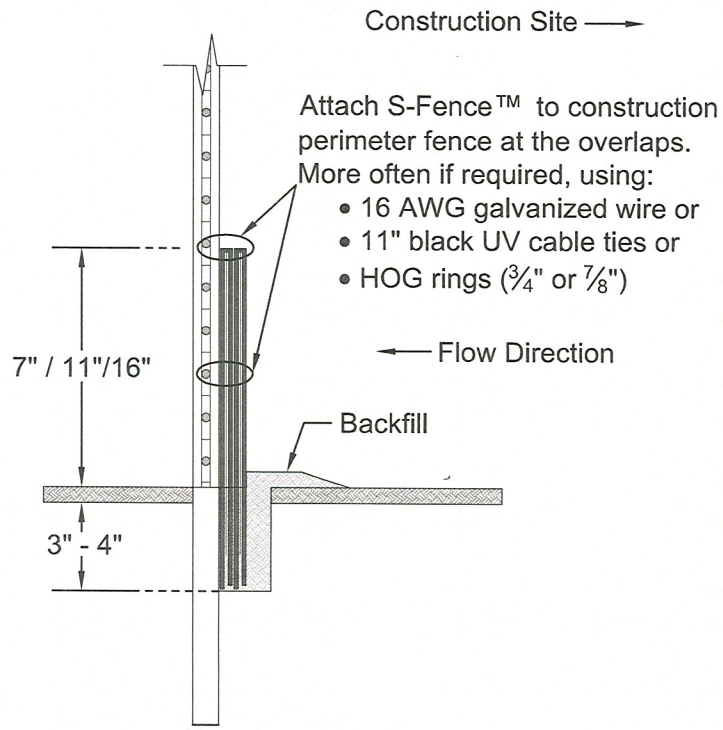

Notes:
1. Cable-ties will require a pilot hole for insertion. Use a punch or small nail.
2. Cut trench 1½" to 2" wide, 3" to 4" deep.
3. Install in slot against downstream side of trench wall, backfill the trench to grade level.
4. Overlap segments by at least 4".

Important: All information, including illustrations, is believed to be reliable. Users, however, should independently evaluate the suitability of each project for their application. ERTEC Environmental Systems makes no warranties as to the accuracy of completeness of the information, and disclaims any liability regarding is use. ERTEC Environmental System's only obligations are those in the ERTEC Environmental Systems Standard Terms and Conditions of Sale for this product, and in no case will ERTEC Environmental Systems or its distributors be liable for any incidental indirect or consequential damages arising for the sale, resale, use or misuse of the product. Specifications are subject to change without notice. In addition, ERTEC Environmental Systems reserves the right to make changes, without notification to Buyer, to processing or materials that do not affect compliance with any applicable specification.

** NOT TO SCALE **

U.S. and International Patents Apply
© 2009 ERTEC Environmental Systems

ERTEC Environmental Systems
http://www.ertecsystems.com/
1150 Ballena Blvd.
Suite 250
Alameda, CA 94501
P. 866-521-0724
F. 510-521-3972

File Name: ERTEC_Installation_Details_S-Fence.dwg
Layout Name: P4 Application Details
Default Print Size: 8.5" x 11"

ERTEC® Hard Surface Guard™

Details

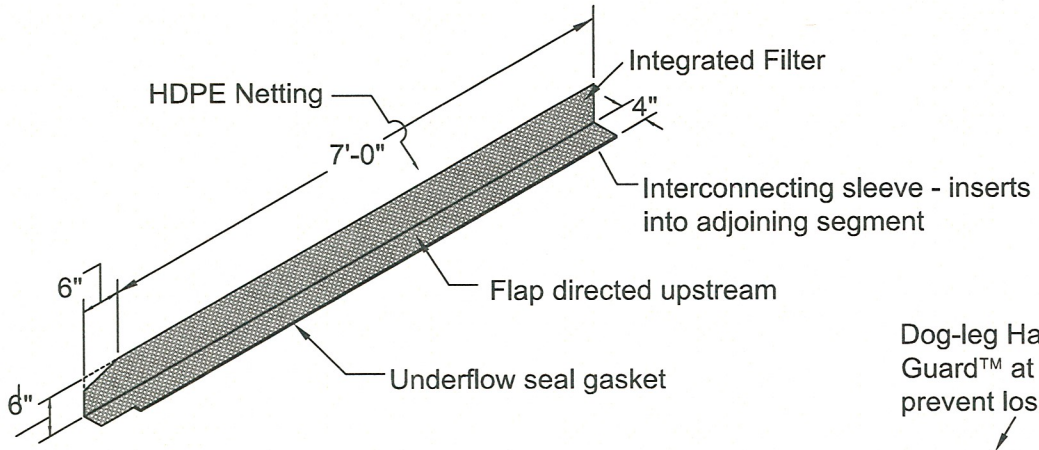

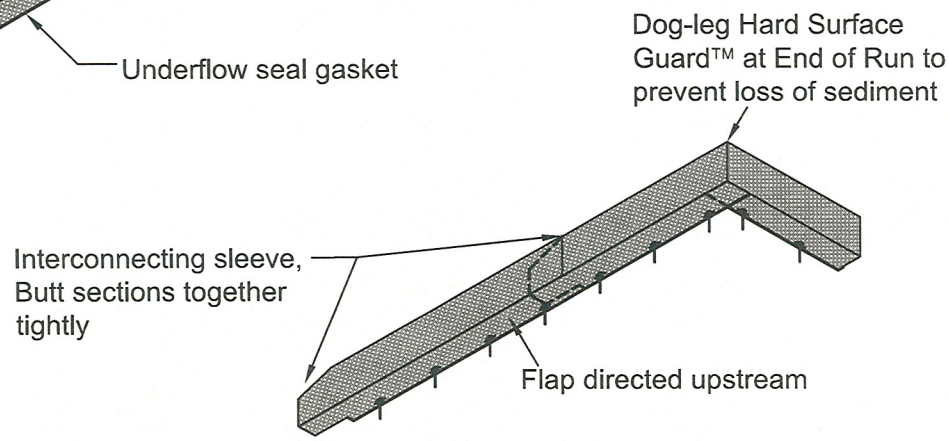

Hard Surface Guard Joint Connection

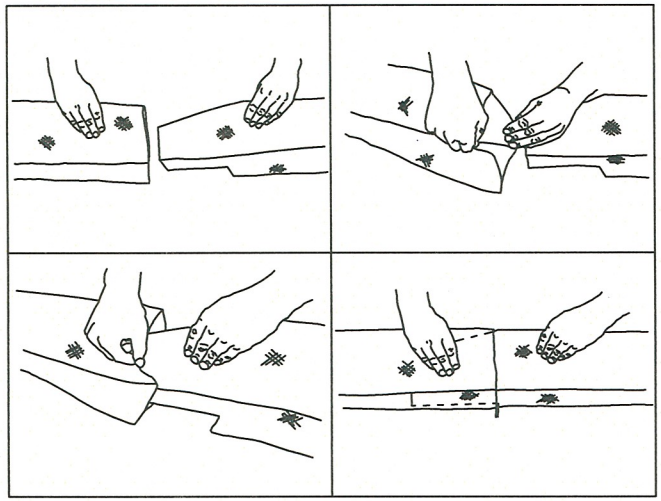

The end of one Hard Surface Guard is inserted into the adjoining Hard Surface Guard section. Then butt the two Hard Surface Guard segments together firmly.

Note:

1. To bend Hard Surface Guard™ around obstacles, first slit flap and gasket through to the horizontal crease - with sharp knife or shears.
2. Then bend to desired angle, in either direction, as shown.

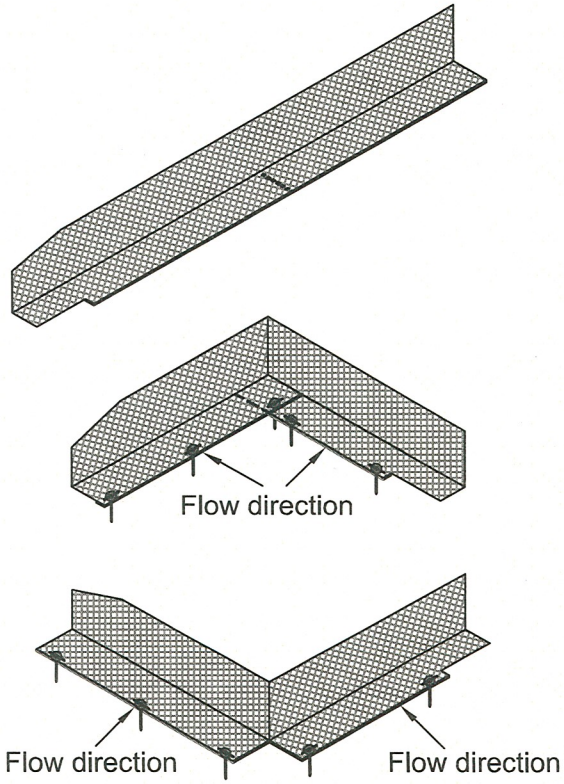

Note:

1. If bend is in this direction, locate gravel bag at the angle to prevent underflow

** NOT TO SCALE **		U.S. and International Patents Apply © 2009 ERTEC Environmental Systems
ERTEC Environmental Systems http://www.ertecsystems.com/		File Name: ERTEC - Installation Details - Hard Surface Guard.dwg
1150 Ballena Blvd. Suite 250 Alameda, CA 94501	P. 866-521-0724 F. 510-521-3972	Layout Name: P1 Details
		Default Print Size: 8.5" x 11" / Page: 1 of 2

ERTEC® Hard Surface Guard™

Details

1. Asphalt Installation
Masonry Nails

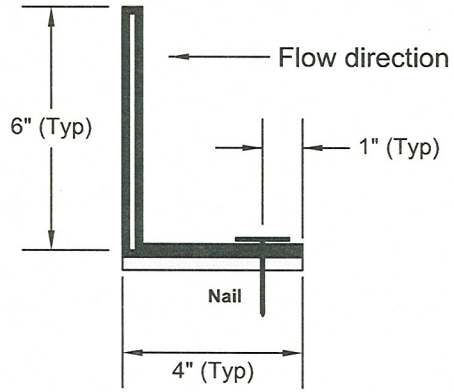

Notes:
1. Install nails flush with netting so that gasket is in good contact with surface.
2. Install 4 to 5 nails per each seven food segment. Use HILTI X-ZF 1½" fasteners with 23mm pre-mounted steel washer (X-ZF 32 P8 S23) or equivalent with automatic powder-actuated hand tool. If necessary use wedge-type expansion anchor.

3. Asphalt or Concrete Installation
Gravel Bags, Snake Bags

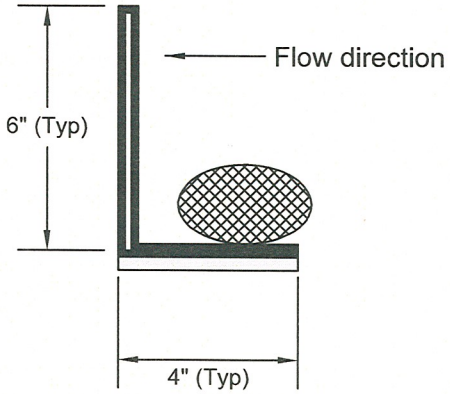

Notes:
1. Install anchor flap facing upstream. Place small snake bags or equivalent (gravel bags) containing clean, pea-sized graded gravel every 2.5 feet. Additional bags can be placed on the flap as necessary to assure good gasket to surface contact.

2. Asphalt or Concrete
Bonding Agent

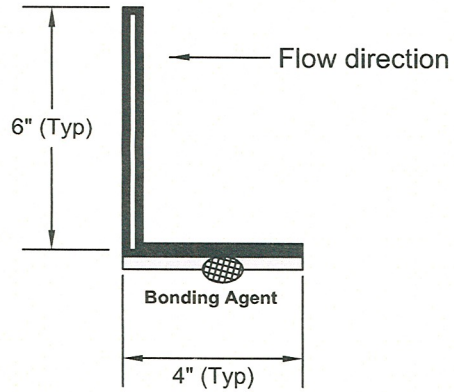

Notes:
1. Install bonding agent between gasket and surface. Use PaverBond, Liquid Nails, or other equivalent. Anchor with gravel bags or other weights until set.

4. Alternative Concrete Installation
Concrete Anchors

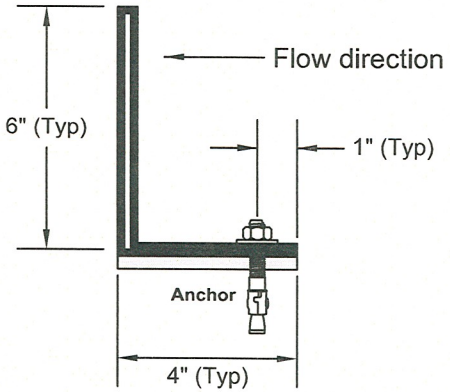

Notes:
1. Install anchors flush with netting so that gasket is in good contact with surface.
2. Install 4 to 5 anchors per each seven foot segment. Use wedge-type expansion anchor ¼" x 2 ¼".

Maintenance: Perform maintenance as required. Inspect following rainfall events and at least daily during prolonged rainfall. Maintain to provide an adequate sediment holding capacity. Debris shall be removed daily and sediment shall be removed when the sediment accumulation reaches 50% of the barrier height. Removed sediment shall be incorporated in the project at designated locations.

Important: All information, including illustrations, is believed to be reliable. Users, however, should independently evaluate the suitability of each project for their application. ERTEC Environmental Systems makes no warranties as to the accuracy of completeness of the information, and disclaims any liability regarding is use. ERTEC Environmental System's only obligations are those in the ERTEC Environmental Systems Standard Terms and Conditions of Sale for this product, and in no case will ERTEC Environmental Systems or its distributors be liable for any incidental indirect or consequential damages arising for the sale, resale, use or misuse of the product. Specifications are subject to change without notice. In addition, ERTEC Environmental Systems reserves the right to make changes, without notification to Buyer, to processing or materials that do not affect compliance with any applicable specification.

** NOT TO SCALE **

U.S. and International Patents Apply
© 2009 ERTEC Environmental Systems

ERTEC Environmental Systems
http://www.ertecsystems.com/
1150 Ballena Blvd.
Suite 250
Alameda, CA 94501
P. 866-521-0724
F. 510-521-3972

File Name: ERTEC - Installation Details - Hard Surface Guard.dwg
Layout Name: P2 Anchor Details
Default Print Size: 8.5" x 11"

ERTEC® Environmental Systems

Protecting Global Lands & Waterways™

ProWattle: Installation Guidelines

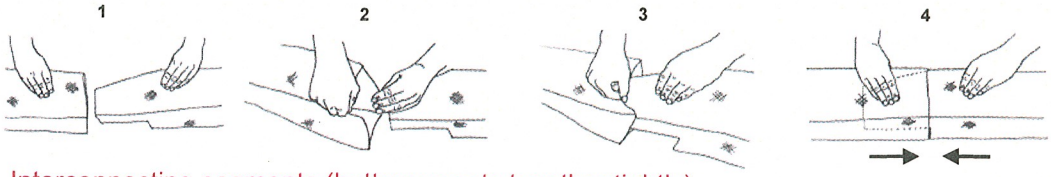

Interconnecting segments (butt segments together tightly)

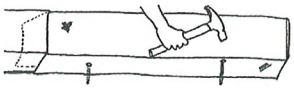

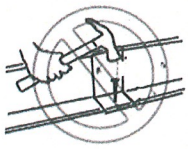

Anchoring with 6" Nails (2 per segment, 3.5' C-C)

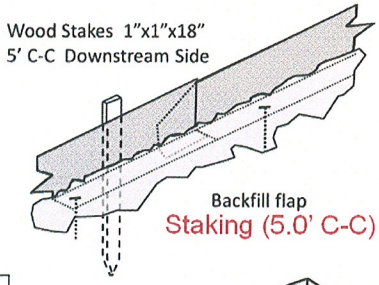

Staking (5.0' C-C)

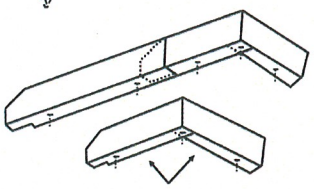

To bend or dogleg - slit flap

Slope Stabilization

Placement on slope, on contours:

Slope	Separation
1:2 and steeper	10 feet
1:2 to 1:4	15 feet
1:4 to 1:10	20 feet
1:10 and flatter	50 feet

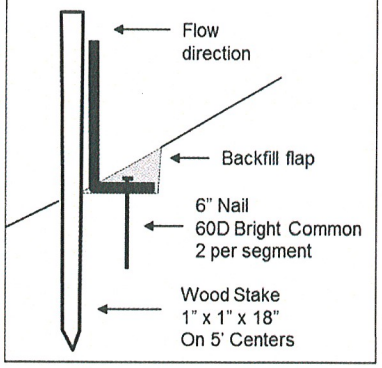

Perimeter Protection

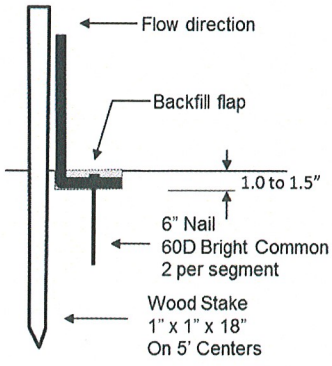

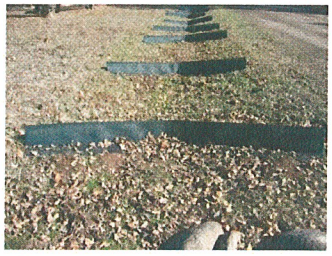

Check Dam

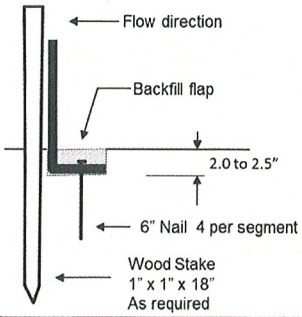

 © 2013 ERTEC Environmental Systems