COLORADO SPRINGS CITY TRAFFIC SIGNAL

INSTALLATION & PARTS SPECIFICATIONS

Effective date 07/15/2020

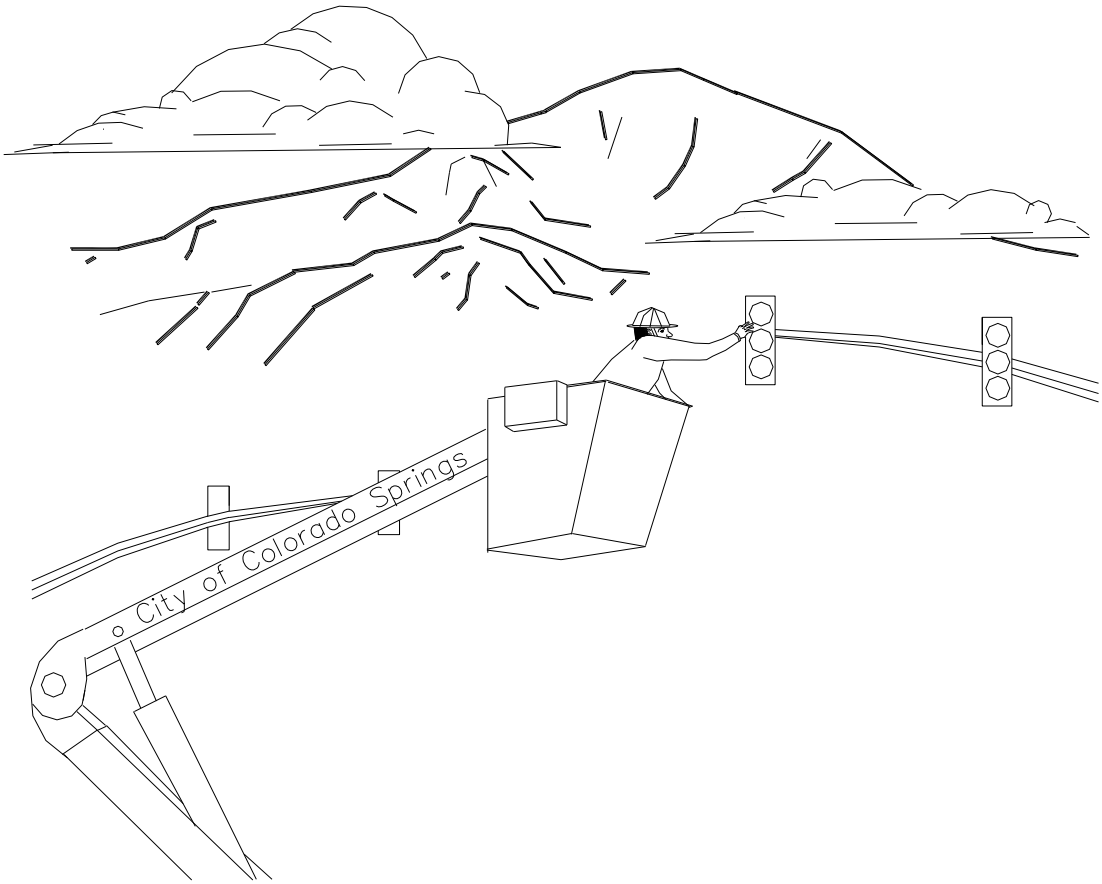

Any changes or specific instructions to this manual will be addressed at the pre-construction meeting. At that time, any questions from the contractor will also be addressed.

COLORADO SPRINGS CITY TRAFFIC SIGNAL

INSTALLATION & PARTS SPECIFICATIONS FOR CONTRACTORS

1.0 Traffic Signal Contractor Pre-Qualifications
Traffic Signal Contractor Pre-Qualification Questionnaire
2.0 General Notes
3.0 Equipment approvals
4.0 Cable Splicing Policy
5.0 Span Wire Profile (Typical)
6.0 Standard Signal Cable Color Codes and Usage
7.0 Examples of Standard Coding as Applied to Different Cables
8.0 Underground Conduit and Pullbox Installation Instructions
9.0 Illuminated Street Name Sign
10.0 Combination Lighting and Traffic Signal Standards
11.0 Typical Traffic Signal Standards
12.0 Loading Information (Mast-arm) / (Span Wire)
13.0 Traffic Signal Foundations Installation
14.0 Traffic Signal Pedestal (Aluminum)
15.0 Traffic Signal School Flasher (Steel, Solar)
16.0 School Flasher foundation
17.0 Power Meter Pedestal and Foundations
18.0 Wire Specifications
19.0 Galvanized Steel Cable
20.0 Traffic Signal Accessories
21.0 Conduit Outlet Bodies and Accessories
22.0 Traffic Signal Heads – Vehicle
23.0 Traffic Signal LED Module (inserts) Specifications
24.0 Pedestrian Signals
25.0 Break Away Tether Assembly
26.0 Entrance Fittings/Signal Head Hangers
27.0 Suspension Clamps
28.0 Upper Arm Assembly
29.0 Single Head Arm Brackets
30.0 Pole Mount Fittings
31.0 Mast Arm Mounting Bracket Assembles
32.0 Pedestrian Pushbuttons
33.0 Junction or Pullboxes
34.0 Rock Fiber Controller Base
35.0 Controller Cabinet Specs
36.0 Video Detection
37.0 LED Roadway Lighting
38.0 Stainless Steel Banding & Buckles

1.0 TRAFFIC SIGNAL CONTRACTOR PRE-QUALIFICATIONS

Contractors hired for the modification or installation of traffic signals, within the jurisdiction of the City of Colorado Springs, shall meet the following requirements:

1.1 Shall provide documentation indicating actual installation and modifications of traffic signals completed in the past year. The statement shall include the name of the agency work was performed for and the date the work was completed and be provided to the Traffic Engineer, or Designee, prior to the start of work. (See attached form)

1.2 Contractor personnel must be competent in the construction and wiring techniques required for traffic signal installation, have adequate knowledge and have experience in the operation of traffic signal controllers. An IMSA Level II Traffic Signals Electrician/Technician is required for any work external to the traffic signal cabinet and required to be on job-site at all times to supervise construction. Contractor shall provide the City a copy of the individual's certification prior to the start of work.

1.3 A pre-construction meeting will be required with the traffic signal contractor and a representative of the City Traffic Signal Section in attendance prior to the start of work to assure that all material, equipment and work specifications are understood.

1.4 Finished product shall conform to current Traffic Signal standards for cosmetics as well as quality in workmanship. Contractor shall guarantee materials and workmanship for a period of 2 years

1. TRAFFIC SIGNAL CONTRACTOR PRE-QUALIFICATION QUESTIONNAIRE

PROJECT:_____ DATE:_____

The City of Colorado requires that prospective bidders on Traffic Signal Projects be pre-qualified. To aid in providing information upon which a decision can be made as to the qualifications of each bidder, the following information is requested. Failure to complete the form or false statements therein shall be reason for disqualification.

I. Company Name:_____

Address:

No. of Employees:_____ Years in Existence:_____

Bonding Capacity:_____

II. EXPERIENCE RECORD YEARS DOLLAR VALUE CONSTRUCTED:

Traffic Signals _____ _____

III. Have you contracted with other municipalities on traffic signal projects in the past year?
Yes _____ No_____

If so, please list:_____

_____

IV. Give details of work performed on similar projects: (Use additional sheets, if necessary)

_____
_____
_____
_____
_____

V. List the name(s) of employees(s) who have an IMSA certification as a Traffic Signals Level II Electrician or Technician. (A copy of the certification shall be provided to the City Traffic Engineer prior to the start of work.)

_____
_____
_____

TRAFFIC SIGNAL CONTRACTOR PRE-QUALIFICATION QUESTIONNAIRE
(Continued)

VI. Any involvement in lawsuits? Yes_____ No _____

Explain:_____
_____
_____

VII. References: List at least two (2) references (Name, Address and Telephone Number) having knowledge of the type and quality of work you have performed.

_____
_____
_____
_____

VIII. Additional Remarks

_____
_____
_____

IX. I CERTIFY THAT THE ABOVE STATEMENTS ARE COMPLETE AND TRUE:

_____ _____
(Signature) (Date)

_____

THE FOLLOWING IS TO BE FILLED IN BY THE TRANSPORTATION DEPARTMENT.

Qualified:_____ Not Qualified:_____ Reason:_____
_____
_____
_____

_____ _____
Director, Transportation Dept. Date

_____ _____
City Traffic Engineer Date

_____ _____
Project Engineer Date

2.0 **GENERAL NOTES:** ALL WORK WILL BE DONE IN ACCORDANCE WITH:

2.1 Contractor shall have a copy of current Traffic Signal Standards on job site at all times.

2.2 All work will be done in accordance with set standards and by the Traffic Engineer, or Designee, at the pre-construction meeting.

2.3 In accordance with the Standards set forth in the "The Manual on Uniform Traffic Control Devices for Streets and Highways."

2.4 Refer to the "Traffic Signal Grounding Methods" manual located on City web site for information on how to ground traffic signal system.

2.5 The Contractor shall be responsible for the location of utilities prior to any excavating; and if changes are required, having the Traffic Engineer or Designee relocate the facility.

2.6 The Contractor shall be responsible for all barricading, safety precautions (CFR1926), and removal of excess dirt and materials.

2.7 Caisson concrete to be State Class BZ poured against virgin (undisturbed) soil. All caissons shall be vibrated to eliminate air pockets. A copy of signed batch ticket must accompany billing. Contractor shall provide concrete strength test results. Contractor shall be responsible for the digging of pole caisson, providing forms, set up of bolts, conduit stubouts, J-box and the forming, pouring and finishing of concrete. All excess concrete shall be properly removed by contractor. The contractor shall provide all materials.

2.8 Signal foundations shall be finished with stubout directions scribed at edge. (See Fig.1-3)

2.9 Contractor shall contact the Traffic Engineer, or Designee, for inspection of form, bolts and stub out layout 24 hours prior to intent of pour, and (2-hour minimum conformation) prior to pouring concrete. (**Pouring bases without an inspection by traffic signal area technician will result in contractor's immediate removal of base and installing a new one at contractor expense)**. Exposed bolt threads and nuts shall be free of concrete and debris. Only 1" of thread exposed between caisson and bottom anchor bolt nut.

2.10 Contractor must supply verification of pole data when furnishing poles.

2.11 Finished product should conform to current Colorado Springs City traffic signals standards for cosmetics & quality in workmanship as stated in this document**. If contractor has any questions or doesn't understand something, then ask for interpretation.**

2.12 **Conditional Acceptance**: Once construction of a traffic signal has been satisfactorily completed, the signals are "conditionally accepted" by owner. At this time the signal is turned on and the "burn-in" period begins. The burn-in period will last 15 days. During the burn-in period the signal system is allowed to operate under real world conditions. Any malfunction occurring during this period will require a repair or replacement and if the malfunction is serious enough, the burn-in period must be restarted.

2.13 **Final Acceptance**: After the burn-in period is completed, all punch list items have been corrected and the contractor has met all contract requirements (such as final clean up of work site, as built drawings and bore logs), the signal will be accepted.

2.14 Contractor shall guarantee materials and workmanship for a period of **2 years**.

General Notes Continued:

2.15 City of Colorado Springs Traffic Signals Division reserves the right to bill contractor for materials and labor for repair and/or replacement of contract work due to faulty craftsmanship during warranty period.

2.16 A minimum of two signal heads shall be maintained over traveled lanes when construction on live intersection requires traffic to move from normally traveled lanes. Signal head not over traveled lanes shall be bagged.

2.17 If contractor requests Signals Personnel during non-duty hours, (after business hours, weekends and holidays) contractor will be billed for any overtime of personnel. Minimum billing for overtime personnel and vehicles is 2 hours minimum at standard overtime rates.

2.18 **The contractor shall submit "As-built" or corrected plans showing, in detail, all construction changes including but not limited to, bore logs, pot hole logs, wiring, cable, poles, controller cabinet, detection systems and location of all conduits within 7 days of installation**.

2.19 All traffic signal equipment that is removed shall remain the property of City of Colorado Springs. Such property is to be returned by the contractor to the 416 W. Fontanero, City Traffic Signals Shop. Contractor must contact Traffic Signals (719-385-6721) to make arrangements for delivery. All traffic signal equipment shall be returned in the same operating condition as removed. **Poles will be stripped clean of all attached parts before delivery.**

2.20 Contractor shall at his sole expense, replace or reconstruct sidewalks, curbs, gutters, pavement and any other improvements removed, broken or damaged by contractor with material and methods that conform to current City Standards.

2.21 The contractor shall have full maintenance responsibility of the traffic signal from the time of Notice to Proceed to the initial acceptance and/or completion of removals in the case of rebuilds.

2.22 All new installations require all vehicle and pedestrian indications to be City of Colorado Springs approved LEDs. Three & four section signal heads mounted on mast arms shall have back-plates with reflective paint or tape around its border.

2.23 Contractors that damages Traffic Signal Systems will be billed for all materials used as well as double time for staff whom are pulled off existing jobs to make the repairs.

2.24 Signal heads shall not be installed if a long delay occures prior to turning signal active. During down time all signal indications shall only be bagged with traffic signal head covers. Signal heads shall not be installed on a new intersection prior to a maximum of one week before receiving power to meter pedestal.

2.25 Acceptable times for turning a new or rebuilt intersection operational is between 9:00 AM Mondays through 12:00 PM Thursdays.

2.26 Contractors installing signal foundations shall terminate the signal conduits into a standard j-box location.

2.27 Base mount cabinets shall have a front and rear concrete pad poured the width of the rock fiber base. Aproximately (30" x 40")

3.0 EQUIPMENT LIST AND APPROVALS:

3.1 Bid Requirements

3.2 Contractor shall submit with bid a list of equipment and materials, which he proposes to furnish. Items include all equipment and materials as identified on the plans or in the specifications by manufacturer's name to identify such equipment and materials.

3.3 Item included on the list are: Signal poles and Mast arms, Traffic Signal Controllers and Cabinets, Vehicle and Pedestrian Signal Heads, Pre-emption Devices, Mounting Hardware, Street Name Signs, Pull Boxes, Video Detection System Components, Wire and any additional items indicated in the project special provisions or requested at the pre-construction meeting.

3.4 **Inspection or sampling of any materials**, other than those already approved, must be made by the Engineer prior to installation. Whenever particular material or equipment is identified by manufacturer name in the plans or specifications, the term "or approved equivalent" is implied. If the contractor proposes a substitution, contractor shall provide additional information **with the bid** to prove the substitution item is of equal or superior quality, and it shall be the City of Colorado Springs Traffic Signals Representative and/or the Engineers discretion whether to approve such substitutions. If not approved, contractor shall agree to supply the originally stated material or equipment at no additional costs. Otherwise, the Engineer may reject the bid as non-responsive.

3.5 The Contractor shall attach to the bid a statement that all material to be supplied is either in exact accordance with the specifications, or shall list in detail any and all substitutions and request the approval of the Engineer for the substitution.

3.6 During execution of the work, the supplying of equipment that is not in accordance with the specifications and which the contractor has not received the Engineer's approval shall be cause for rejection. Correction of the non-specification item will be entirely at the contractor's expense.

4.0 **CABLE SPLICING POLICY** (New and temporary Span installations)

4.1 No splice shall be made to a signal cable except in the base of a signal pole. All cables for detection cameras shall be continuous without splices from the camera to the signal cabinet. All power feeds shall be continuous without splicing from the source to the meter and from the meter to the cabinet. At no time shall any cable be permitted to be spliced in a pull box.

4.2 **GENERAL**- All signal cable color-coding shall be in accordance with City standards. All conductors with white sheathing shall be reserved for AC neutral returns and no other color shall be used for a return. All whites shall be connected in the cabinet. All splicing shall be carried out in the neatest possible fashion, and cables not involved in a particular splice may not be interwoven with the conductors of a splice.

4.3 **MATERIALS**- Screw type connectors such as Kerney or split bolt connector shall not be used. (No wire nuts). For 14 AWG wire, such as signal cable or detector lead, shall be made using only uninsulated butt splices for 14-16 AWG wire or 10-12 AWG splices for 2 pairs of 14 AWG wires. 10-12 AWG butt splices shall not be crimped with 1 14 AWG wire inserted per end. Termination of wires in controller cabinets shall be made with uninsulated crimp-on forks sized to the wires used. Only one wire shall be used per fork. All crimps on 14 AWG or 10-12 AWG wires shall be made with crimping tool used for uninsulated connectors. Pin of crimp tool will make contact 180 degrees from seam of butt connectors. Proper sized crimp-on connectors for wires shall be used. Under no circumstances, shall circular mil area of wire be reduced to fit crimp-on connector. Insulating tape used shall be Scotch Brand #88 or #33 only. No substitutes shall be allowed. Some splices require usage of self-vulcanizing rubber tape, in these applications, Okonite low voltage rubber tape or equal shall be used.

4.4 **TAPING-**Electrical tape shall be applied neatly to minimize possibilities of moisture entering the splice and to minimize the possibility of tape unraveling and exposing the splice. Scotch #88 or #33 shall be used to insulate splices and shall be applied so that no less than one tape width extends beyond any live metal and shall be no less than three wraps thick. Overall abrasion and moisture protection shall be provided by no less than three tape wraps. Each wrap shall overlap the previous wrap by ½ the width of the tape. All neutrals shall be insulated and taped like any other conductor. Tape shall be handled in such a manner as to prevent dirt or other materials from contaminating the splice. Any nicked conductors shall be taped.

4.5 **HANDHOLE SPLICE**-Splices made in the pole base handholes require attention to ensure that all cables enter the splice in a parallel fashion so that the splice can be pulled safely out of the pole base handhole. No splice shall be made so that repairs or inspection are forced to take place inside the pole. Overall Okoniting is not required on handhole splices. Spare conductors shall not be cut back but shall be individually insulated, folded back and taped. All neutrals will be spliced at pole drop ends. Pole drops shall extend 18” out of handhole and strip sheathing from end of cable to handhole.

4.6 **OVERHEAD SIGNAL WIRING-** A service drip loop shall be provided at the signal head in the individual head’s feed cable. This loop shall be 2 coils of cable 12 inches in diameter and taped to the main cable at the top. Slack in the main cable shall be pulled out and the cable taped to the span wire grips at ends of the span with 2” electrical tape. Drip loop shall be

provided next to the poles for the overhead cables. These loops also shall be about 12 inches in diameter and also taped to span wire grips. **Always wire the inside head as if it would have a left turn movement, i.e., use a 7-conductor.**

4.7 **PEDESTRIAN PUSH BUTTONS-** Pedestrian push buttons shall have a dedicated continuous wire lead-in to the controller cabinet. Mount pushbuttons between 40” and 44” above the sidewalk.

4.8 **CABLE SUPPORT RINGS-**All cable support rings shall be 18” apart.

4.9 Cables entering signal pole shall have the smaller cables lay on top of the heavier cables. Drilled hole in pole shall be deburred with file to remove sharp edges. 3” chase nipples shall be used where the wires enter the span poles. 3” Lock ring shall be installed on the outside of pole.

4.10 **HANGING HEAD-** Heads shall be installed at a minimum of 17 feet from street to the bottom of the tether clamp. Heads should be installed with each head attached to the tether. Tether shall look level across the bottom of all heads from one side to the other. Pole mount and Ped head equipment must be bolted onto signal poles. Banding type ASTRO-BRAC assembly or approved equivalent shall attach heads to the mast-arm.

4.11 **POWER RUNS** shall conform to Colorado Springs Utilities standards. Line Feed to meter shall have #6 AWG Stranded wire as a minimum. Meter pedestal to cabinet shall use #6 AWG Stranded wire in Black, White and Green.

4.12 **OVERHEAD SIGNS-**Overhead signs such as lane usage or school crossing signs hung on span and tether shall be installed with a minimum of 2 vertical supports. Each support shall be attached to both span and tether. Each sign support shall be made of aluminum medium extrusion, or large corner angle extrusion channels. Signs are bolted to each vertical channel using 4 lip-lock bolts. Flat backing plate must be used with each span wire clip.

All signs that are greater than 30” wide shall be mounted with a Astro type bracket on the pole or mast arm.

5.0 Span Wire Profile (Typical standard)

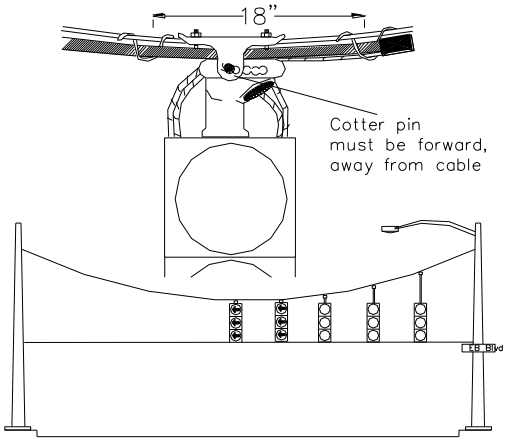

6.0 CABLE COLOR CODES AND USAGE

6.1 The purpose of this instruction is to develop and codify standard color-codes for signal cables and to develop a basis for selecting color codes for nonstandard applications.

6.2 All cable purchased by Traffic Engineering for signal use comes under the IMSA 19-1 1984 specification which sets insulation and performance standards as well as establishing a color sequence. The conductor base color is overlaid with a tracer giving a distinctive and unique color combination for each conductor. The six base colors are:

BLACK	GREEN
WHITE	ORANGE
RED	BLUE

6.3 For a multiconductor cable these colors are repeated as necessary with an appropriate tracer color. The first twenty (20) conductors are:

1)	BLACK	11)	BLUE/BLACK
2)	WHITE	12)	BLACK/WHITE
3)	RED	13)	RED/WHITE
4)	GREEN	14)	GREEN/WHITE
5)	ORANGE	15)	BLUE/WHITE
6)	BLUE	16)	BLACK/RED
7)	WHITE/BLACK	17)	WHITE/RED
8)	RED/BLACK	18)	ORANGE/RED
9)	GREEN/BLACK	19)	BLUE/RED
10)	ORANGE/BLACK	20)	RED/GREEN

6.4 As the same colors are used for the tracers as for the base color, it is obvious that the tracer color cannot be applied to its same color, which limits a given tracer color to less than six, but the base colors do nonetheless repeat by groups of six. The IMSA specification also sets a required pattern for cable construction so that for all manufacturers, the cable will be at the center and Black/White will be adjacent to the Blue/Black. This can help locate a conductor if the tracers have been rubbed off. The manufacturer may choose to wrap primary base colors again. When this occurs, the primary base colors will be those closest to the inside wrap and the secondary colors will be those closest to the outside wrap. Secondary colors will be referred to as red 2nd, green 2nd, and black 2nd, etc.

6.5 Conductor colors are always in both written or spoken communications described with the base color first, and the tracer color next. IN print, the (/) is usually used to separate the colors. Verbally, the phrase “with a” is usually inserted to separate the colors. Abbreviated versions of the colors are often used for convenience, these are:

BLACK - BLK	GREEN - GRN
WHITE - WH	YELLOW - YEL
RED - RED	BLUE - BLU

7.0 COLOR CODE: TRAFFIC SIGNAL WIRING

PHASE		25/C	19&20/C	12&15/C
2&6	RD	RD	RD	RD
	AMB	AMB	AMB	AMB
	GRN	GRN	GRN	GRN
	DW	RD/WH	RD/WH	RD/WH(15/C)
	W	GRN/WH	GRN/WH	GRN/WH(15/C)
4&8	RD	RD/BLK	RD/BLK	RD/BLK
	AMB	AMB/BLK	AMB/BLK	AMB/BLK
	GRN	GRN/BLK	GRN/BLK	GRN/BLK
	DW	BLK/WH	BLK/WH	
	W	BLU/WH	BLU/WH	
1&5	RD LT	RD 2nd (RD/BLU)	RD/GRN (20/C)	
	AMB LT	BLK	BLK	BLK
	GRN LT	BLU	BLU	BLU
3&7	RD LT	BLK/RD	BLK/RD	
	AMB LT	AMB/RD	AMB/RD	BLK/WH
	GRN/LT	BLU/RD	BLU/RD	BLU/BLK
SPARES		RD/GRN	BLU/BLK	BLU/WH(15C)
		AMB/GRN		
		BLK 2ND (BLK/GRN) (Lighted Arterial Signs)		
		GRN 2ND (GRN/AMB)		
		BLU/BLK		
COMMON		WH	WH	WH
		WH 2ND	WH/BLK	WH/BLK
		WH/BLK	WH/RD	
		WH/RD		

8.0 **UNDERGROUND CONDUIT AND PULLBOX INSTALLATION INSTRUCTIONS**.

8.1 Underground conduit shall be 2 or 3 inches (inside diameter) as specified on drawings and shall be C Schedule 80 (PVC) conduit. Conduit shall be buried not less than 24 inches, 30 inches under all roadways. PVC 90° sweeps shall be connected to conduits with proper PVC fittings and compatable glue. Under no circumstances shall improvised fittings or taped together joints be made. Conduit size shall not be changed in a continuous run. Conduit shall be installed in a manner that shall not cause hazards to conduit or cabling due to crushing or settling of soil. All PVC conduit shall be connected with PVC cement. Bored HDPE conduits shall be black with 3-red tracer per Utilities standards.

8.2 Conduit crossing under paved streets, alleys or sidewalks shall always include no less than two runs of conduit, and more runs shall be included if specified. Conduit runs for mast arm intersections shall utilize 2-3” and 1-2” conduits minimum, (one 2” for StreetLights and two 3” for Traffic Signals). All other conduit runs shall be run in pairs unless single conduit runs are specified. Single run to a push button pedestal may be a single conduit 18” under concrete.

8.3 All conduits shall be continuous, free of dirt and debris, and ends of conduit shall have bell end attached. Unused conduits shall be capped to prevent entrance of dirt, water and rodents.

8.4 Backfilling: All trenches must be backfilled in lifts. Each lift (approx. 8”) must be tamped or compressed. Contractor is responsible for settleing of trench line for up to two years.

8.5 Bends in conduit shall be made by means of factory prepared radius bends and appropriate couplings. Bends made by heating and bending conduit shall not be allowed unless special permission is granted. Additive total of bends (in degrees) shall under no circumstances be more than 360 degrees between openings of conduit, including upturn bends at pullboxes.

8.6 Conduit entering steel poles shall enter pole base under ground level and thus into pole using PVC conduit. Pole base may not be cut above ground level nor shall conduit cross concrete base. Conduit riser up wooden poles shall be minimum ID 2” and installed in according to Utilities standards. Conduit stubs shall be extended 6” above ground in appropriate quadrants of wood poles per Utilities standards. U-guard will rise up the pole to protect Wire.

8.7 Pullboxes vary in size depending on application and shall be a minimum TIER 15 rated polymer rock fiber concrete or reinforced fiber. Removable top shall be imprinted “TRAFFIC” for signal conduits and shall be secured by stainless steel bolt (1/2” x 13 NC hexhead bolt with washer). Must have easy clean out holes. Conduits shall be terminated only at a pole riser, pullbox or cabinet base. Pullboxes shall be installed so that the pullbox cannot sink. A minimum depth of four inches of gravel shall be placed under the bottom of each pullbox and extend out 6” from box on all sides. (1/4” to 3/4” agrigate is acceptable)

8.8 Contractor shall install pullboxes next to each pole base to receive the Traffic Signal conduits extending from the base.

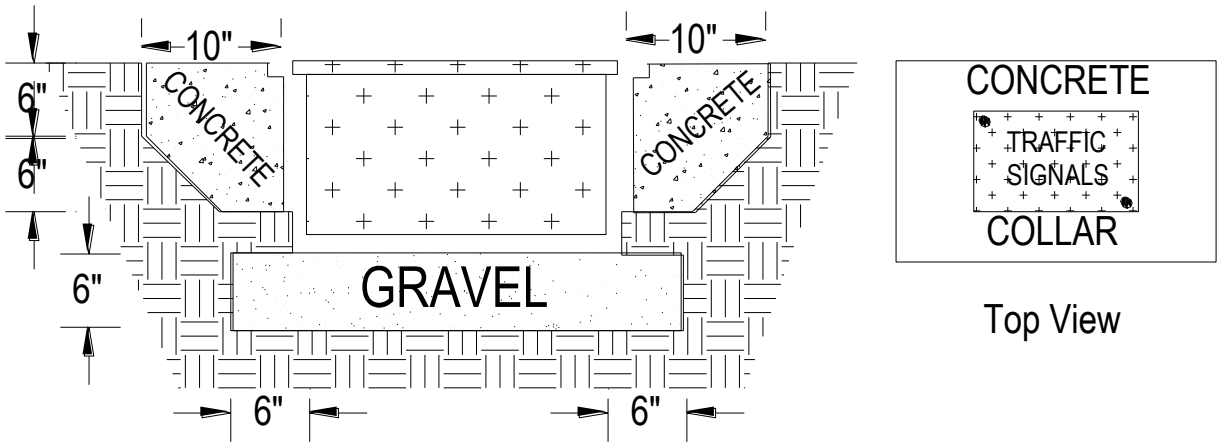

8.9 Pull boxes shall have a concrete collar placed around them when used along Highway projects or when City signals inspector determines a need. Pullbox shall be placed so that top of box is 1 inch above grade to prevent water from entering box, with the exception of pullboxes placed in a sidewalk which shall be at grade. Side of pullbox shall not be cut to allow entrance of conduit. All conduits entering pullboxes shall be equipped with a 90-degree bend placed so that wire can be pulled out of the box without rubbing against the pullbox. Conduit shall be installed so that open end is approximately 3 inch above ground. Conduits shall be within 3 inches of the side from which conduit enters the pullbox. Where rigid conduit enters pullbox, plastic bushings shall be provided at open end of bend.

8.10 Underground conduit runs shall have a pullbox installed every 300 feet maximum, or centered in the run if over 300 feet long. Runs less than 300 feet requires a pullbox at each end.

8.11 All underground conduit runs shall have a single 14 AWG (min) wire installed from pullbox to pullbox for locating purposes.

8.12 All underground conduits shall have a single ¼ " Nylon pull rope installed from pullbox to pullbox with a minimum of 3' of slack in each box and tied off so the rope cannot be accidently pulled.

8.13 Conduits shall terminate in pull-boxes with bell ends installed on each conduit.

8.14 Colorado Springs Utilities require underground power runs to be installed using conduit that is black with 3-red tracers. CSU Material Specification 194-2, Appendix-E

8.15 Overhead and profile view of typical underground layout.

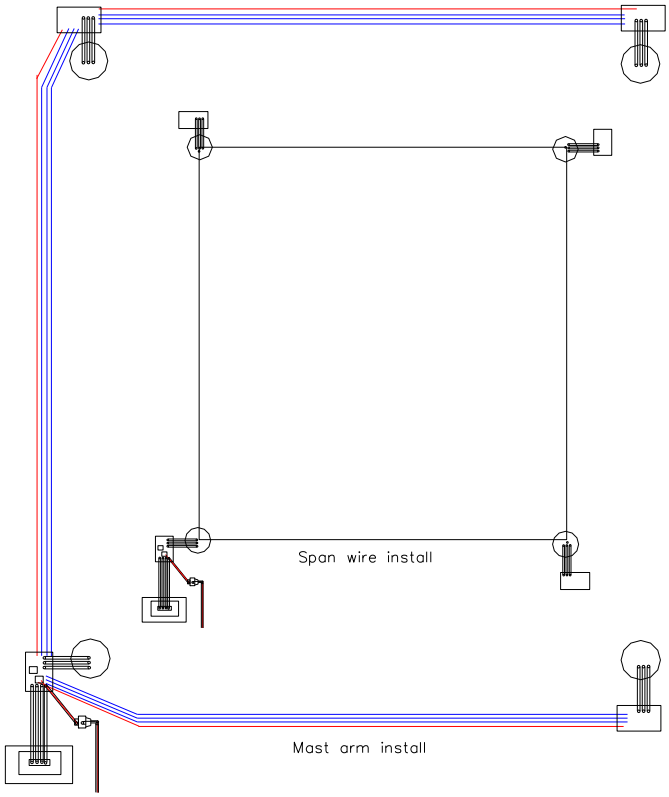

Profile View

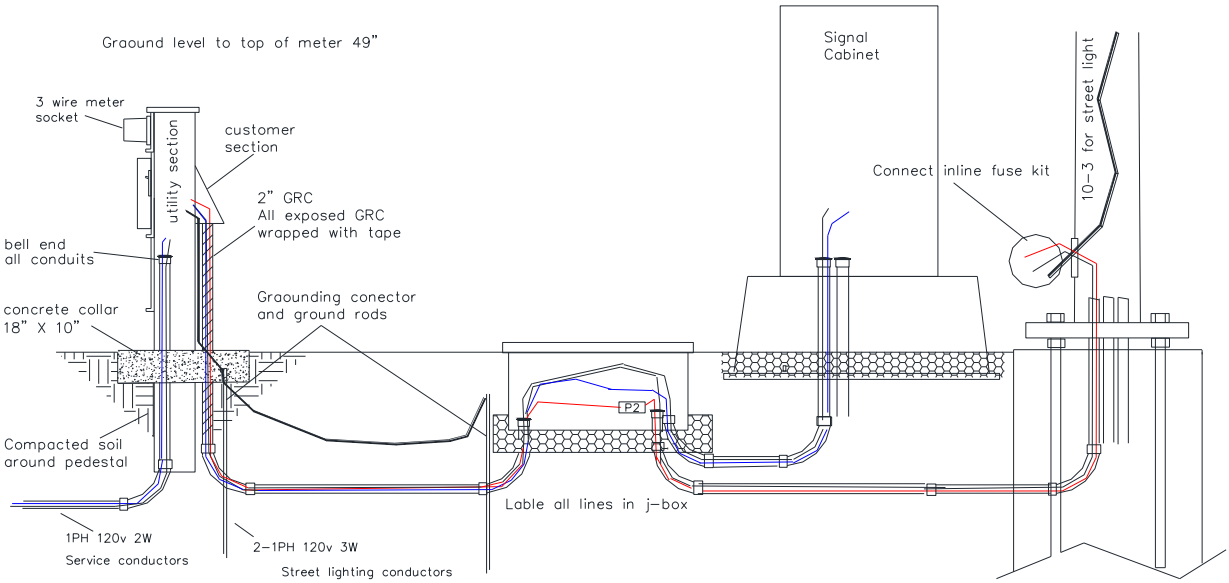

9.0 Illuminated Street Name Signs Specifications

9.1 LIGHTING

- The sign face shall be internally illuminated with LED's (behind the sign face).
- The lighting shall be consistent throughout the face of the sign, free of shadows.
- The LED generator shall be 110V AC.
- Power source shall be UL Class II with UL listing.
- Photocell is required and included.

9.2 SIGN FACE

- The Sign is to be double sided.
- The Sign face shall be .118" impact resistant polycarbonate and capable of handling wind loads of 110 MPH.
- Sign film (sheeting) is to be green EC film over translucent vinyl.
- Sign face shall be easily detached from door framing for easy maintenance.
- The color of the sheeting is to be white lettering with green background
- City will approve layout of sign titles.
- Factory layout is to be approved prior to production.

9.3 SIGN HOUSING

- The Sign housing shall be at a minimum constructed of 5052 H32 .125" extruded aluminum with continuous welded seams.
- Sign shall be UL listed.
- Sign shall have suitable weather protection and drainage channels.
- Shall be installed with two (2) pivoting Sign brackets and show no flexing of the sign housing.
- The doors of the sign shall be made in such a way that all corners are welded.
- The doors shall be mounted to the sign with a continuous stainless steel hinge, open in a downward direction and allow access from either side.
- Door latches shall be ¼ turn stainless steel latches. One latch mounted for every 2' of sign. (4' sign =2, 6' sign=3 & 8' sign = 4). No tools shall be required to open door or replace sign face. Sign faces shall not be removed by a sliding motion out of the end of the sign.
- The sign housing and door shall be powder coated gloss black**.**
- Ensure that the Internally Illuminated Sign and equipment furnished have a manufacturer's warranty covering defects in assembly, fabrication, and materials, other than expendable items such as bulbs, for a minimum of 5 years.

9.4 MOUNTING

- Two pivoting Sign Brackets with dampener springs are to be ordered with <u>each</u> sign.
- Two spring dampening sign brackets, one fixed and one adjustable, may be used where there is adequate mounting height and separation from signal heads to mount on mast arms. This application needs approval from City Traffic prior to proceeding. This application should only be considered when all signs can be mounted the same for consistency around the intersection.
- Signs (8' & 6') shall be mounted toward the outer end of the mounting arm. (4' sign centered).
- Wire, IMSA 19-1, 4 conductor, feeding sign shall have a compression strain relief threaded into the pole or arm.

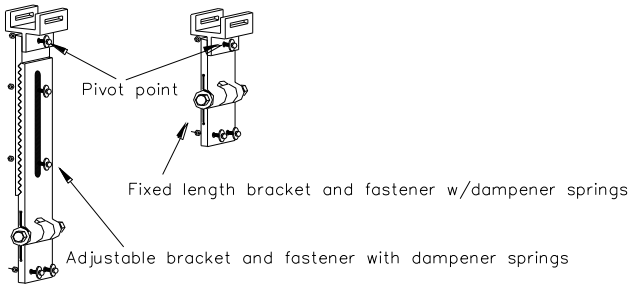

9.5 SIGN Cantilever MOUNTING ARM (Pelco AP-3130-8-Galv, clamp size varies)

- Illuminated sign will be attached to Sign Mount Arm with 2 fixed spring dampening sign brackets. Other applications may require one adjustable and one fixed bracket.
- Arm shall mount on the signal pole at approximately 24’ from ground level.
- Arm shall be made from schedule 40 steel pipe.
- Clamp material to be ASTM designation A36. (36.0 KSI minimum yield strength).
- Clamp connecting bolts shall be high strength ASTM designation A325
- Arm and clamp shall be powder coated black.
- Clamp-on bracket shall be available in ranges to accommodate various pole sizes.

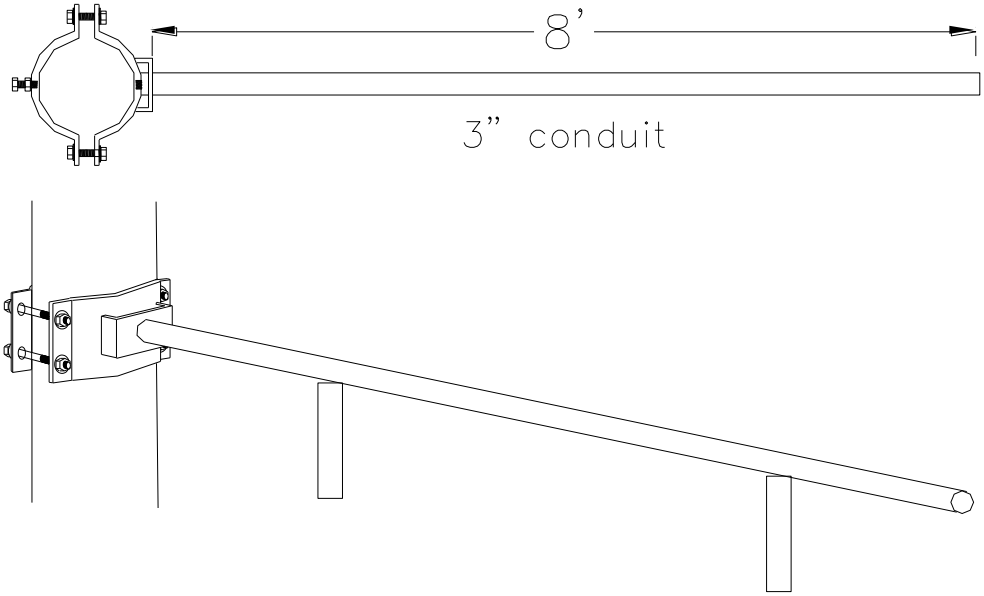

10.0 Combination Lighting and Traffic Signal Standards

10.1 **GENERAL-**Poles shall consist of tapered pole, round, curved tapered traffic signal mast arm (if required), luminaries arm, hand hole covers, anchor bolts, washers / nuts for anchor bolts and base plate. Traffic signal poles, lighting poles, pedestals, mast arms, luminaire arms shall be of the general configuration shown in the City's Traffic Signal Standard Drawings. Pole should be designed to accommodate the minimum loads as shown on the standard plan drawing.

10.2 **CALCULATIONS-** Calculations and detailed drawings shall include mast arm, luminaries arm, pole, base plate, and anchor bolt analysis.Maximum loads and stresses shall be determined for the most critical wind direction. The pole shall be analyzed in its final deflected position, at the arm to pole connection(s) and pole base. Maximum arm and pole loads, stresses and combined stress ratios (CSR) shall be provided for the specified loading combinations, as well as maximum top of pole dead load rotation. Shaft dimensions shall be equivalent in strength for the loads shown on the drawings.

10.3 **POLE-**The pole shall be fabricated from coil or plate conforming to ASTM A572 or A595 Grade A with a minimum yield strength of 55 ksi, and have a constant linear taper of 0.14 in/ft. The shaft shall be one piece, and contain no circumferential welded butt splices. Laminated tubes are not permitted. The pole shall have a reinforced 6.50" x 10.0" handhole with cover located 1'-6" from the pole base. Each pole shall be provided with a decorative end cap secured in place with setscrews. The pole shall be hot dip galvanized and powder coated as specified in the contract documents.

10.4 **MASTARM-** The mast arms shall be round, curved and formed from tubes conforming to ASTM A595 Grade A with a minimum yield strength of 55 ksi, and have a constant linear taper of 0.14 in/ft. Mast arms up to 55' in length shall be manufactured and shipped in one piece. Each arm shall be provided with an end cap secured in place with setscrews. The mast arm shall be hot dip galvanized and powder coated as specified in the contract documents.

10.5 **BASE PLATE-**Base plates shall conform to ASTM A36 or ASTM A572. Plates shall be integrally welded to the tubes with a telescopic joint or a full penetration weld joint with a backed ring and is hot dip galvanized and powder coated as specified in the contract documents.

10.6 **ANCHOR BOLTS-** Anchor bolts shall conform to the requirements of ASTM F1554. The upper 12" of the bolts shall be hot dip galvanized per ASTM A153. Each anchor bolt shall be supplied with two hex nuts and two flat washers. The strength of the nuts shall equal or exceed the proof load of the bolts. A decorative cast aluminum nut cover shall be provided for each anchor bolt. Each nut cover shall be attached to the pole with a 0.25" stainless steel, self-tapping, hex head screw.

10.7 **DESIGN-**Design shall be in accordance with the 1994 AASHTO "Standard Specifications for Structural Supports for Highway Signs, Luminaries and Traffic Signals." Calculations and detailed drawings shall be submitted demonstrating compliance with the AASHTO specification.

10.8 **FABRICATOR-** The Fabricator shall be certified under Category I, "Conventional Steel Structures" as set forth by the American Institute of Steel Construction Quality Certification Program. Proof of this certification will be required prior to bid opening to ensure that the fabricator has the personnel, organization, experience, procedures, knowledge, equipment, capability and commitment to fabricate quality Traffic Pole Structures.

10.9 **WELDING-**All welding shall be in accordance with Sections 1 through 8 of the American Welding Society (AWS) D1.1 Structural Welding Code. Tackers and welders shall be qualified in accordance with the code. Tube longitudinal seam welds shall be free of cracks and excessive undercut, performed with automatic processes, and be visually inspected. Longitudinal welds suspected to contain defects shall be magnetic particle inspected. All circumferential butt-welded pole and arm splices shall be ultrasonically or radiographically inspected.

10.10 **MATERIAL CERTIFICATIONS-**All materials and products shall be manufactured in the United States of America, and comply with ASTM or AASHTO specifications. Mill certifications shall be supplied as proof of compliance with the specifications.

10.11 **COMBINATION COATING GALVANIZED-POWDER TOP COAT-** All items before being assembled into a completed product shall be cleaned in a manner that will remove all impurities and foreign matter. After welding, all flux shall be removed. The final assembly will be dried to ensure no moisture is trapped in the product.

All items shall be hot-dipped galvanized to ASTM A123 for fabricated products and ASTM A153 for hardware items. All processing will be result in a debris free zinc coating. Galvanizing shall be abrasive blasted to a uniform dull appearance.

10.12 **EXTERIOR CAOTING-**All galvanized exterior surfaces shall be coated with a Urethane or Triglycidyl Isocyanurate (TGIC) Polyester Powder to a minimum film thickness of 3.0 mils (0.003”). Poles shall be powder coated over galvanizing Semi Gloss Black/ Polyester TGIC or equivalent .

10.13 **PACKAGING-**Prior to shipment poles shall be wrapped for protection.

10.14 **Delivery of Mastarms/Poles-**Deliveries shall provide 48 hour notice to Traffic Engineering (Carol Medina-719-385-6721, secondary #719-385-6724) prior to delivery. This is to assure that equipment is available for unloading. Failure to do so will result in denied access into City yard. <u>NO DELIVERIES WILL BE ACCEPTED ON, WEEKENDS AND HOLIDAYS OR WITHOUT 48 HOUR NOTICE</u>.

11.0 Typical Traffic Signal Standards.

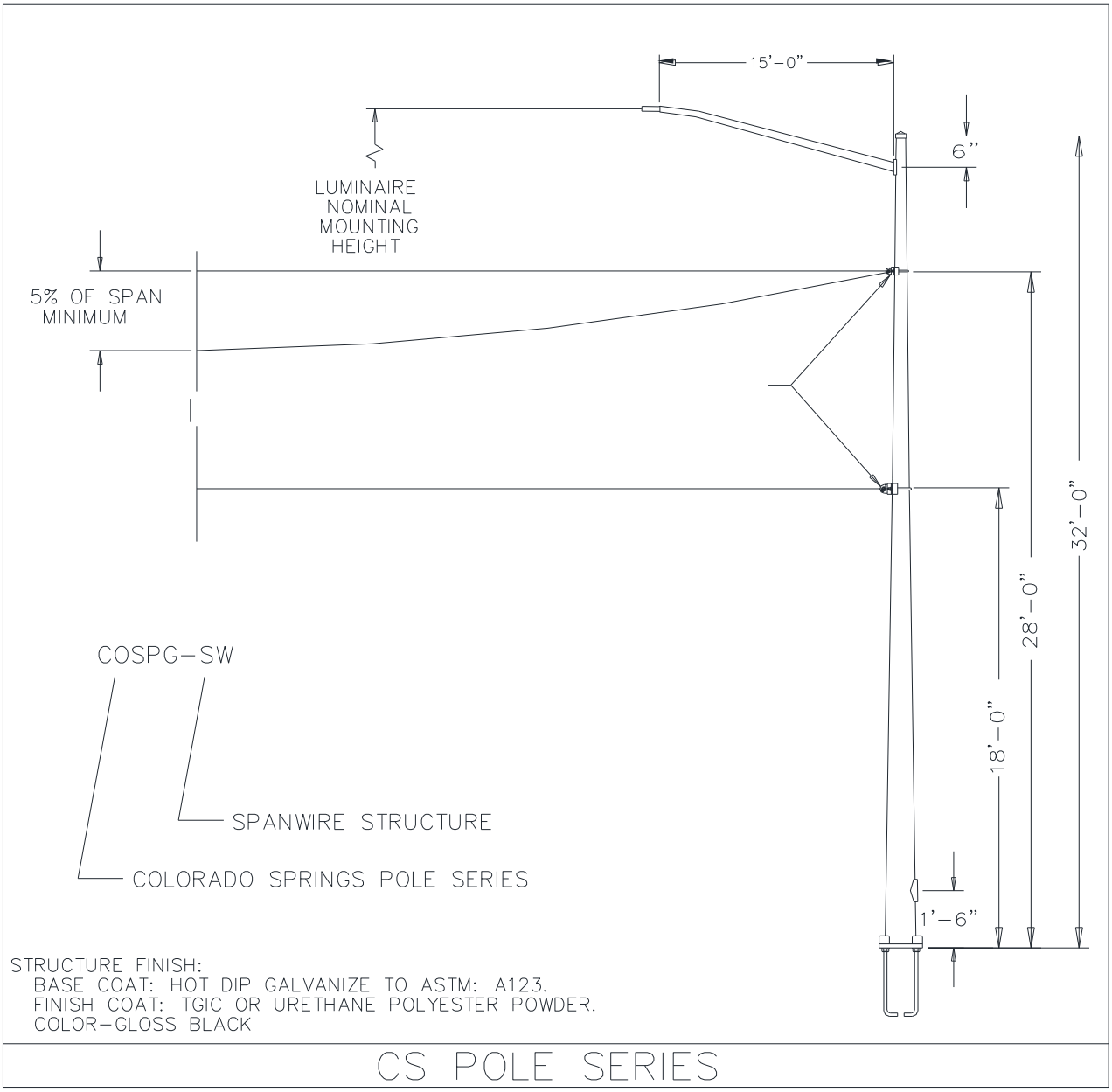

CS POLE SERIES

MATERIAL DATA

COMPONENT	ASTM DESIGNATION	MIN. YIELD (KSI)
POLE SHAFT	A595 GR. A OR A572	55
BASE PLATE	A36	36
ANCHOR BOLTS	F1554	55

COMPONENT	ASTM DESIGNATION	MIN. YIELD (KSI)
LUMINAIRE TUBE	A595 GR.A	55
LUMINAIRE ATTACHMENT	A36	36
LUMINAIRE CONNECT BOLTS	SAE GR.5	--
GALVANIZING-HARDWARE	A153	--

11.1 **POLE DATA**

TABLE 3:

TAPERED ROUND Span POLES

Span	Pole Data				Pole Base Data			Anchor Bolt Data *			
Signal Span (Ft)	Base DIA. (IN)	Top DIA. (IN)	Length (FT)	Gauge Or Thick (IN)	Square "S" (IN)	Bolt Circle "Y" (IN)	Thick "M" (IN)	DIA. "K" (IN)	Length "J" (IN)	Hook "H" (IN)	Thread Length "U" (IN)
Up to 150'	16.00	11.52	32.00	0.250	23.00 x 23.00	22.00	2.00	2.00	84.00	6.00	10.00
151' to 175'	18.00	13.52	32.00	0.250	29.00 x 26.00	24.00	2.00	2.00	84.00	6.00	10.00

All Poles ordered shall include hand hole covers, cable clamp collars, anchor bolt, nuts & washers. The large Span poles (151'-175' require 6 anchor bolts per design).

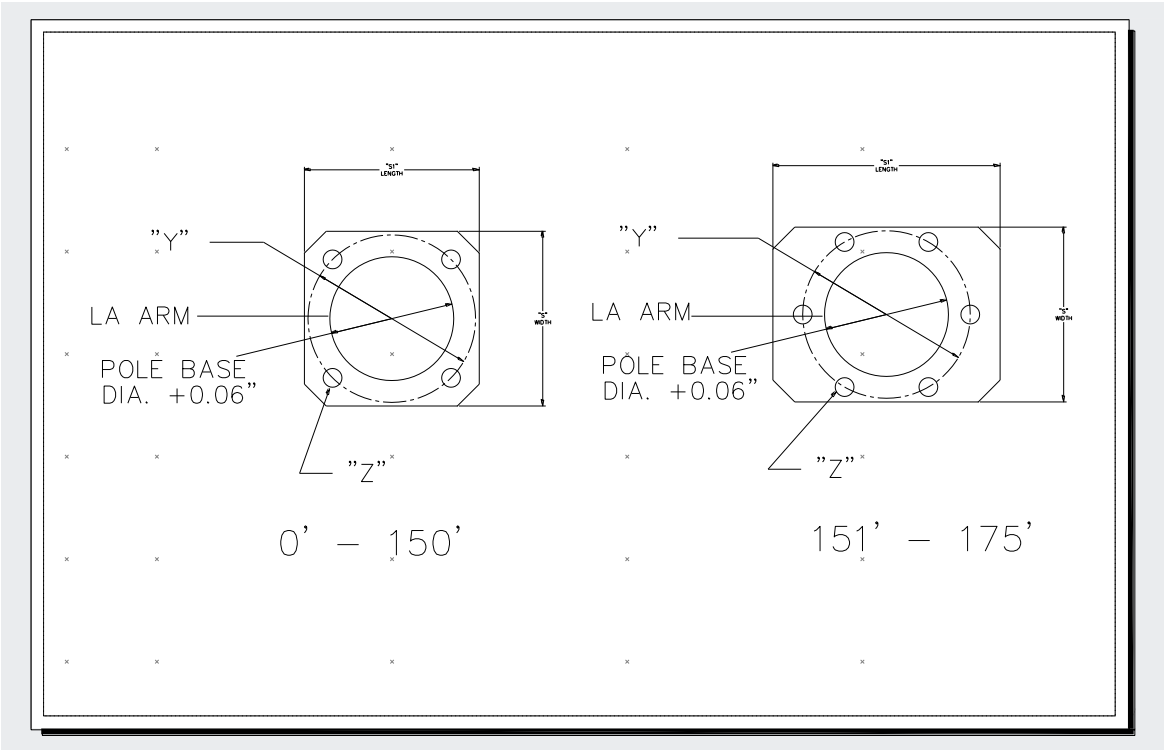

11.3 Typical Pole and Mast arm With Luminaries

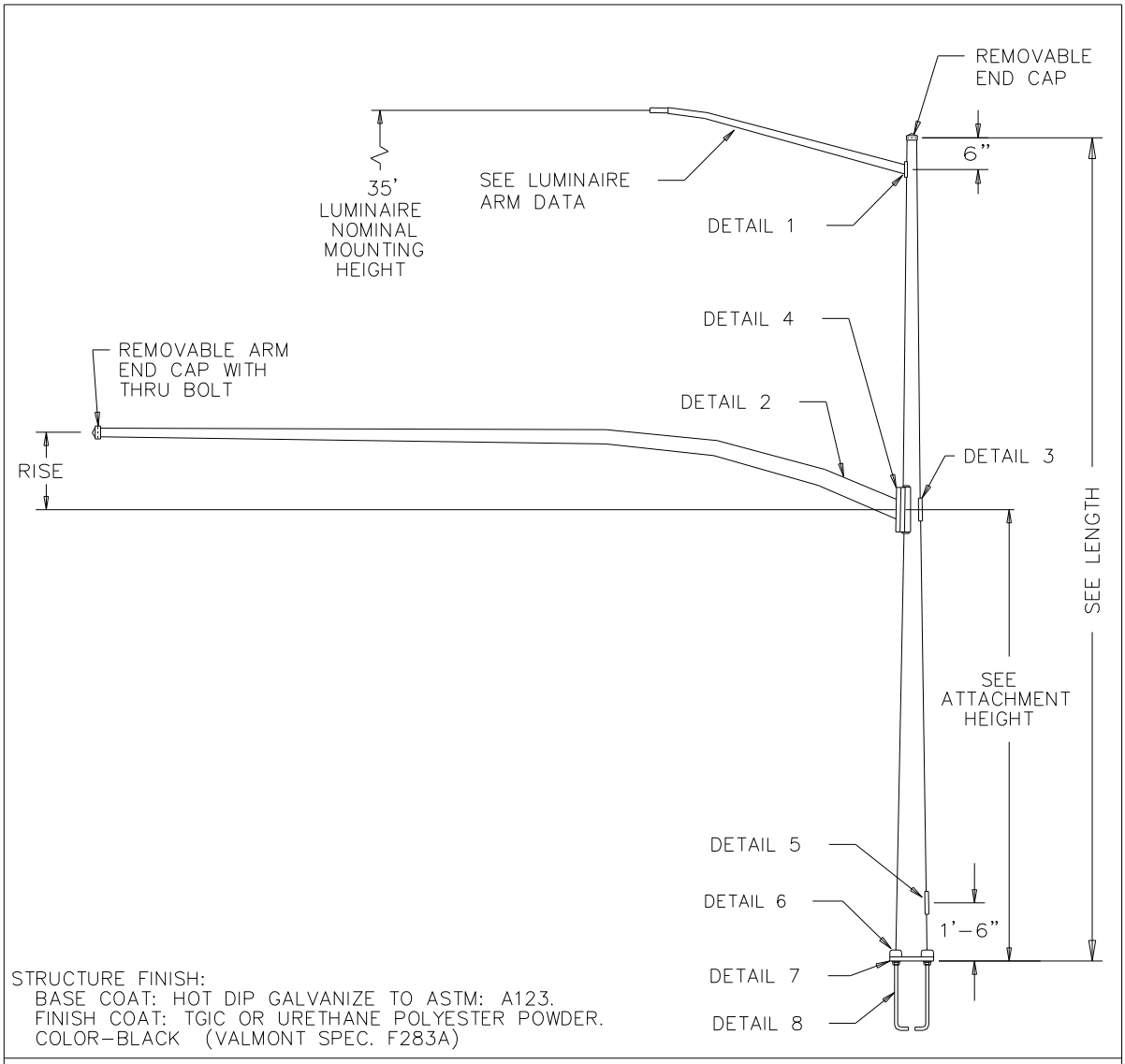

COSPG POLE SERIES

MATERIAL DATA

COMPONENT	ASTM DESIGNATION	MIN. YIELD (KSI)	COMPONENT	ASTM DESIGNATION	MIN. YIELD (KSI)
TAPERED TUBES	A595 GR.A OR A572	55	LUMINAIRE ATTACHMENT	A36	36
			LUMINAIRE CONNECT BOLTS	SAE GR.5	--
			GALVANIZING-HARDWARE	A153	--
BASE PLATE	A36	36			
SIGNAL ARM ATTACHMENT	A36	36			
SIGNAL ARM CONNECT BOLTS	A325	--			
ANCHOR BOLTS	F1554	55			

12.0 LOADING INFORMATION (MAST-ARM)

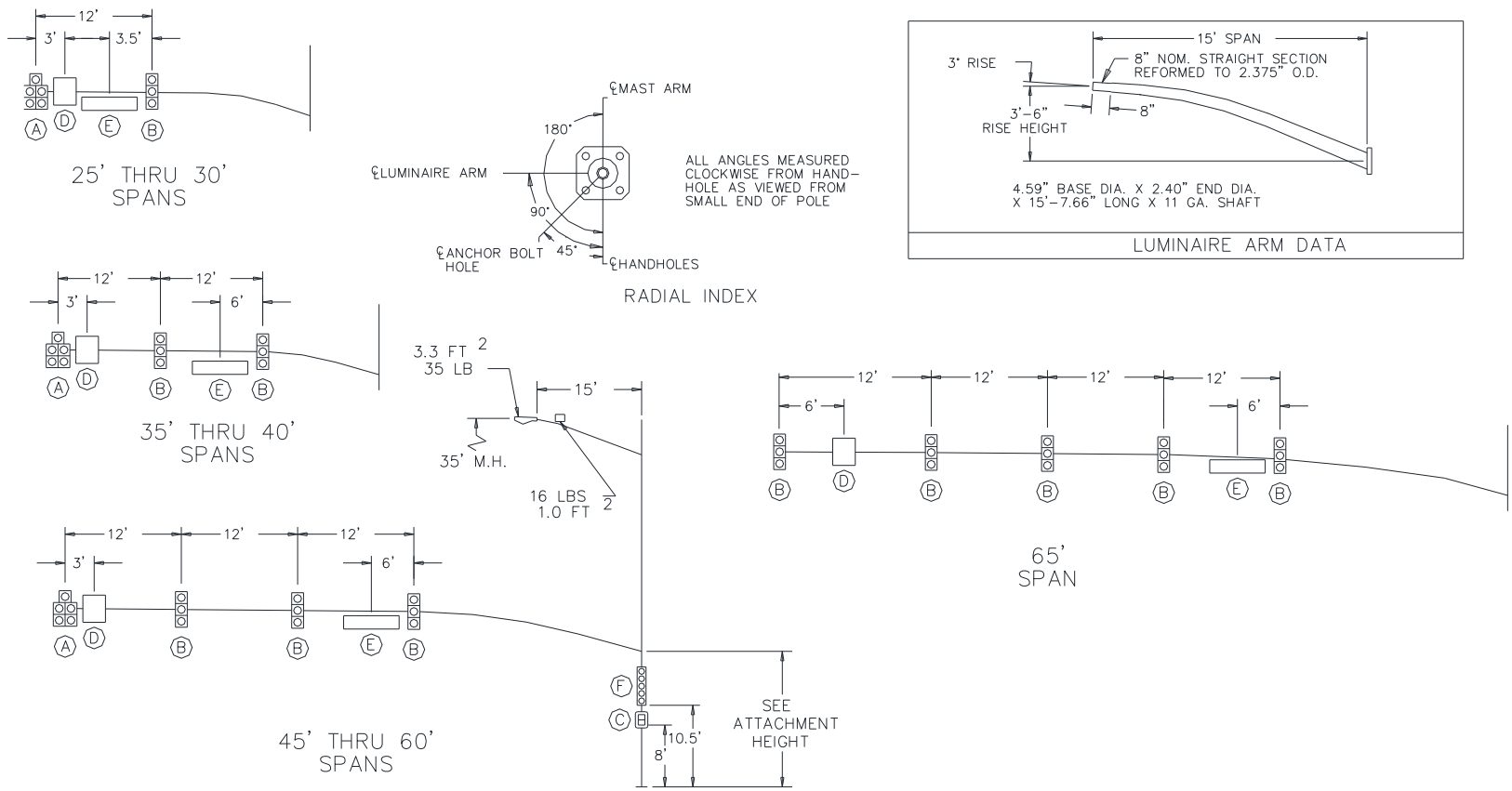

DESIGN CRITERIA:

1994 AASHTO STANDARD SPECIFICATIONS FOR STRUCTURAL SUPPORTS FOR HIGHWAY SIGNS, LUMINAIRES AND TRAFFIC SIGNALS

WIND VELOCITY:

90 MPH ISOTACH.

DEVICE	DESCRIPTION	PROJ.AREA (FT ^{2})	WEIGHT (LBS)
A	12"-5 SEC. SIGNAL WITH BACKPLATE	6.81	64
B	12"-3 SEC. SIGNAL WITH BACKPLATE	4.08	35
C	DUAL-2 SEC-PEDESTRIAN	8.00	14
D	30" X 36" REGULATORY SIGN	7.50	20
E	18" X 96" STREET NAME SIGN	12.00	82

LOADING INFORMATION MAXIMUM LOADS ONLY – NOT FOR CONSTRUCTION

12.1 LOADING INFORMATION (SPANWIRE)

DESIGN CRITERIA:

1) 1994 AASHTO STANDARD SPECIFICATIONS FOR STRUCTURAL SUPPORTS FOR HIGHWAY SIGNS, LUMINAIRES AND TRAFFIC SIGNALS

2) ALL STRUCTURES ARE DESIGNED TO SUPPORT THE MAXIMUM LOADINGS SHOWN WITH A MINIMUM SPAN WIRE OF 5% AND TETHERS WIRES THAT BREAK AWAY AT A MAXIMUM LOAD OF 900 LBS.

3) THE TRAFFIC SIGNALS AND SIGNS SHOWN MAY BE PLACED AT ANY LOCATION ON THE SPAN WIRE, PROVIDED THAT THE MINIMUM SPACING SHOWN IS MAINTAINED.

4) ALL STRUCTURES ARE DESIGNED TO SUPPORT A 12'-0" MAXIMUM LENGTH LUMINAIRE ARM AT A 35'-0" MAXIMUM LUMINAIRE MOUNTING HEIGHT, WHILE SUPPORTING A LUMINAIRE HAVING A MAXIMUM PROJECTED AREA OF 5.3 FT. SQ. AND A MAXIMUM WEIGHT OF 18 LBS.

WIND VELOCITY:

80 MPH ISOTACH.

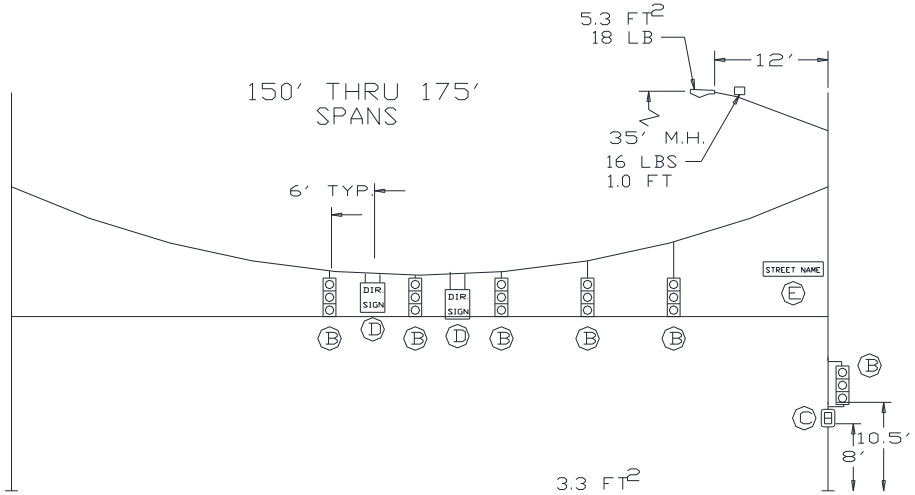

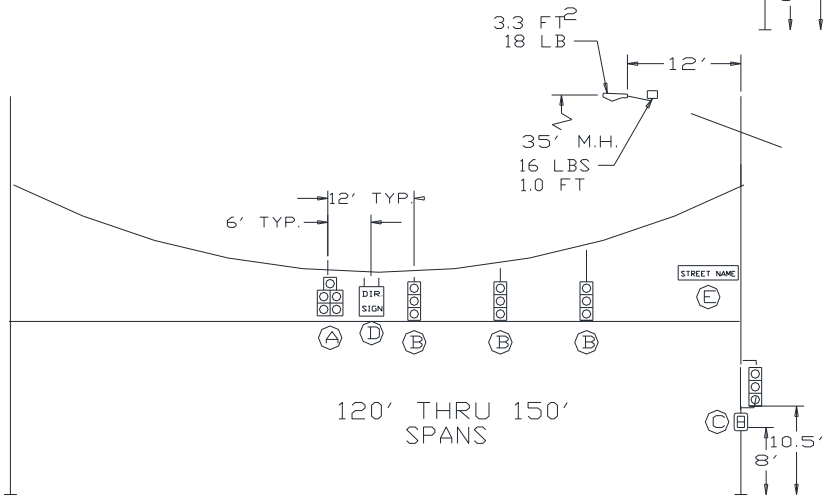

DEVICE	DESCRIPTION	PROJ.AREA (FT2)	WEIGHT (LBS)
A	12"-5 SEC. SIGNAL WITHOUT BACKPLATE	6.81	64
B	12"-3 SEC. SIGNAL WITHOUT BACKPLATE	4.08	35
C	DUAL-2 SEC-PEDESTRIAN	8.00	14
D	30" X 36" REGULATORY SIGN	7.50	20
E	18" X 96" STREET NAME SIGN	12.00	82

LOADING INFORMATION ONLY

MAXIMUM LOADS NOT FOR CONSTRUCTION

13.0 TRAFFIC SIGNAL FOUNDATIONS

13.1 Foundation General notes:

13.2 Concrete = CDOT approved class BZ.

13.3 Shaft for concrete foundation to be drilled by mechanical auger or hydrovaced when needed.

13.4 Foundation design requires that the shaft be founded in compact sand, clay, or sandy clay. If by visual inspection of the hole other material is present, the foundation design shall be modified as determined by the engineer.

13.5 Concrete shall be poured in lifts not exceeding 3 feet in depth. At the pouring of each lift, concrete shall be mechanically vibrated to remove air pockets.

13.6 Foundation shall be poured 7 to 10 days in advance of pole installation.

13.7 When ambient temperature is below (40*F) poured foundations shall be covered with blankets and /or straw per direction of the Engineer.

13.8 Foundation shall be poured monolithic to finished grade-(No cold joints).

13.9 Reinforced steel per ASTM A615 specification, grade 60 for all bars.

13.10 All anchor bolts shall be ASTM F1554 Grade 55.

13.11 Foundation depths vary, per the standard sheet.

13.12 Grounding Details. Refer to **"City of Colorado Springs Traffic Signal Grounding Methods"** manual for greater details. Manual is located on City web site: Springsgov.com/City engineering/Reference Materials/Standard Specifications & Traffic Manuals.

13.12.1 Equipment Grounding Conductor (EGC) Use at least 10 gauge, insulated, green, stranded copper. Refer to "City of Colorado Springs Traffic Signal Grounding Methods" manual.

13.12.2 Ground pole using UFER grounding electrode conductor (GEC)- at least 6gauge, Bare, stranded copper.

13.12.3 Connect to rebar cage of concrete foundation using clamp suitable for submersion in concrete.

13.13 Contractor shall install j-boxes next to each signal pole foundation.

13.14 Traffic Signal Foundations-(Typical). (See next page.)

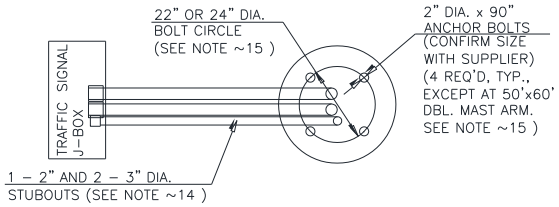

TYPICAL PLAN VIEW

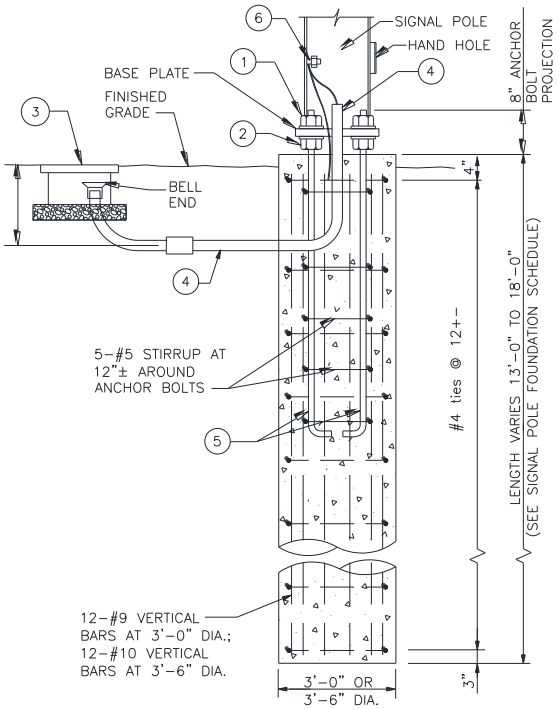

TYPICAL ELEVATION

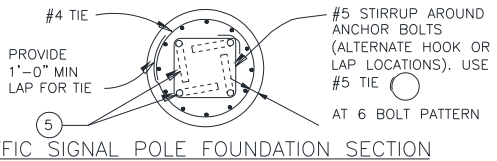

TRAFFIC SIGNAL POLE FOUNDATION SECTION

SINGLE MAST ARM SIGNAL POLE FOUNDATION SCHEDULE			
MAST ARM LENGTH(FT)	BOLT CIRCLE DIA.(IN)	CAISSON DIA.(IN)	CAISSON LENGTH(FT)
20	22	36	13
25	22	36	13
30	22	36	14
35	22	36	14
40	22	36	15
45	22	36	15
50	22	36	16
55	22	36	16
60	22	36	17
65	22	36	17

DOUBLE MAST ARM SIGNAL POLE FOUNDATION SCHEDULE			
MAST ARM LENGTHS (FT x FT)	BOLT CIRCLE DIA.(IN)	CAISSON DIA.(IN)	CAISSON LENGTH (FT)
20 to 50 x 30 to 50	22 (4 BOLTS)	36	18
30 x 60 35 x 60 40 x 60 45 x 55 45 x 60 50 x 55	24 (4 BOLTS)	42	18
50 x 60	24 (6 BOLTS)	42	18

SPAN WIRE POLE FOUNDATION SCHEDULE	MAX. SPAN WIRE LENGTH(FT)	BOLT CIRCLE DIA.(IN)	CAISSON DIA.(IN)	CAISSON LENGTH(FT)
	150	22-4BOLT	36	16
	175	24-6BOLT	42	17

DETAIL NOTES

1. HEAVY HEX NUTS & FLAT WASHERS
2. HEAVY HEX LEVELING NUTS & WASHERS
3. J-BOX
4. PROVIDE ONE (1) - 2" DIAMETER SCHEDULE 40 PVC CONDUIT (24" MIN. DEPTH, 30" MIN. DEPTH UNDER ROADWAY) & TWO (2) - 3" DIAMETER SCHEDULE 40 PVC CONDUITS TO THE TRAFFIC SIGNAL J-BOX. INSTALL BELL ENDS ON EACH CONDUIT.
5. INSTALL ANCHOR BOLTS (FURNISHED WITH POLE) PER MANUFACTURER'S TEMPLATE (FURNISHED WITH ORDER). ORIENT HOOKS SUCH THAT A CONCRETE PUMP HOSE CAN ACCESS THE BOTTOM OF THE EXCAVATION.
6. GROUNDING NUT. SEE SECTION 13.12 FOR INFORMATION ON GROUNDING REQUIREMENTS.

FOUNDATION DESIGN AND CONSTRUCTION NOTES

1. THE STANDARD SIGNAL FOUNDATIONS SHOWN ON THIS DRAWING SHALL ONLY BE USED WITH THE CITY OF COLORADO SPRINGS STANDARD SIGNAL PLANS, AS DEVELOPED BY VALMONT INDUSTRIES.
2. ALL WORK SHALL BE IN ACCORDANCE WITH THE COLORADO SPRINGS CITY TRAFFIC SIGNAL INSTALLATION AND PARTS SPECIFICATIONS.
3. ALL CAISSON CONCRETE SHALL BE CDOT CLASS BZ, f'_c = 4000 psi.
4. ALL REINFORCING STEEL SHALL BE GRADE 60, f_y = 60,000 psi.
5. ANCHOR BOLTS SHALL BE ASTM F1554 MODIFIED TO 55 ksi YIELD STRENGTH. ANCHOR BOLTS SHALL BE FURNISHED BY SIGNAL POLE MANUFACTURER.
6. THE SIGNAL FOUNDATION DESIGN SHOWN ON THIS DRAWING ASSUMES THE MINIMUM SOIL CHARACTERISTICS AS WOULD BE TYPICALLY ENCOUNTERED IN COLORADO SPRINGS WHICH ARE NOTED BELOW. IN THE EVENT THAT SOFT SOIL CONDITIONS (A BLOW COUNT OF N<8) ARE ENCOUNTERED, A SITE SPECIFIC GEOTECHNICAL EVALUATION AND FOUNDATION DESIGN WILL BE NECESSARY.

   ASSUMED GEOTECHNICAL DESIGN PARAMETERS:

   SOIL DENSITY (~g) = 120 pcf
   SOIL COHESION = 750 psf
   ANGLE OF INTERNAL FRICTION (ø) = 26°
   HORIZONTAL MODULUS OF SUBGRADE REACTION (K) = 77 Tcf
   E_{50}= 0.01 in/in

7. IF THE FOLOWING SITUATIONS ARE ENCOUNTERED DURING DRILLING, CONTACT THE CITY OF COLORADO SPRINGS ENGINEER:

   (A) SIGNALS WILL NOT BE INSTALLED WITHIN THE ROADWAY PRISM.
   (B) THE SOIL HAS A HIGH ORGANIC CONTENT OR CONSISTS OF SATURATED SILT AND CLAY.
   (C) THE SITE WON'T SUPPORT THE WEIGHT OF THE DRILLING RIG. (D) THE FOUNDATION SOILS ARE NOT HOMOGENEOUS.
   (E) FIRM BEDROCK IS ENCOUNTERED.

(A) PRIOR TO POURING CONCRETE, ANCHOR BOLT THREADS SHALL BE OILED. BOLT POSITIONS SHALL BE ACCURATE TO 1/8"+/-. BOLTS SHALL BE ACCURATELY SQUARE WITH CURB LINE.
(B) PRIOR TO POURING CONCRETE, CONDUITS SHALL BE TAPED. CONDUIT DIRECTIONS ARE TO BE DETERMINED BY THE TRAFFIC ENGINEER OR FIELD REPRESENTATIVE. MARK ALL CONDUIT RUNS ON TOP OF THE CONCRETE BASE. MARKS SHOULD BE 2" FROM THE PERIMETER OF THE BASE.
(C) CAISSONS SHALL BE PLACED AGAINST UNDISTURBED EARTH.
(D) CONCRETE SHALL BE VIBRATED.
(E) A MINIMUM OF 3" CONCRETE COVER SHALL BE MAINTAINED AROUND THE STEEL CAGE. A MAXIMUM OF 4" OF COVER IS ALLOWED AT THE TOP OF THE CAGE.
(F) ALL CONDUIT STUBS SHALL EXTEND FREELY BEYOND THE POUR AND SHALL BE FITTED WITH A COUPLING ON EACH STUB. STUBS SHALL BE TAPED TO PREVENT ENTRY OF DIRT OR CONCRETE.
(G) LOOSE DIRT SHALL BE REMOVED FROM THE BOTTOM OF THE HOLE PRIOR TO POURING CONCRETE.
(H) TRASH SHALL NOT BE THROWN INTO THE HOLE.
(I) THE BASE SURFACE SHALL BE SMOOTH FINISHED WITH A STEEL TROWEL AND HAVE A LIGHT BROOM FINISH.
(J) THE BASE TOP SHALL BE FLUSH TO SIDEWALK GRADE OR, IF NO ATTACHED TO SIDEWALK, 1" ABOVE GRADE.
(K) NO COLD JOINTS ARE ALLOWED IN CAISSONS. POUR CAISSONS CONTINUOUSLY TO FINISHED GRADE.
(L) POLE FOUNDATION MAY ALTER IN DEPTH AND/OR DIAMETER, AS APPROVED BY THE CITY'S TRAFFIC ENGINEER. THE CITY SHALL APPROVE MODIFICATIONS NEEDED FOR THE CAISSONS DUE TO UNFORESEEN CONDITIONS.
(M) BASE DIMENSIONS AND BOLT CIRCLE PATTERN MAY VARY FROM THE STANDARD, BUT ONLY UPON APPROVAL BY THE CITY TRAFFIC ENGINEER.

14.0 TRAFFIC SIGNAL PEDESTAL (Pelco PB-5100-10-P)

Spun Aluminum for galvanized intersections and Powder Coated Gloss Black when used with a black colored intersection.

14.1 Pedestal poles shall be designed to meet AASHTO 90 MPH wind velocity. 10' minimum pole threaded for square base pedestal; to include pole, cap, base and anchor bolts. Pole shall be aluminum 4.5 inches in diameter and twelve feet high with one end threaded for base. Base shall be cast aluminum with a 6-3/8 inch mounting radius, 15 inches high, threaded to receive 4.5-inch aluminum pole. Threads shall be 4" NPSM. Anchor bolts shall include 8 nuts and 8 washers, be ¾ inches in diameter, 18 inches in length and shall have an "L" bend at the bottom. One 8' grounding rod shall be installed. **All hardware shall be bolted to the pole.**

14.2 Caissons shall be 4000 psi concrete.

14.3 Grounding Details. Refer to **"City of Colorado Springs Traffic Signal Grounding Methods"** manual for greater details.

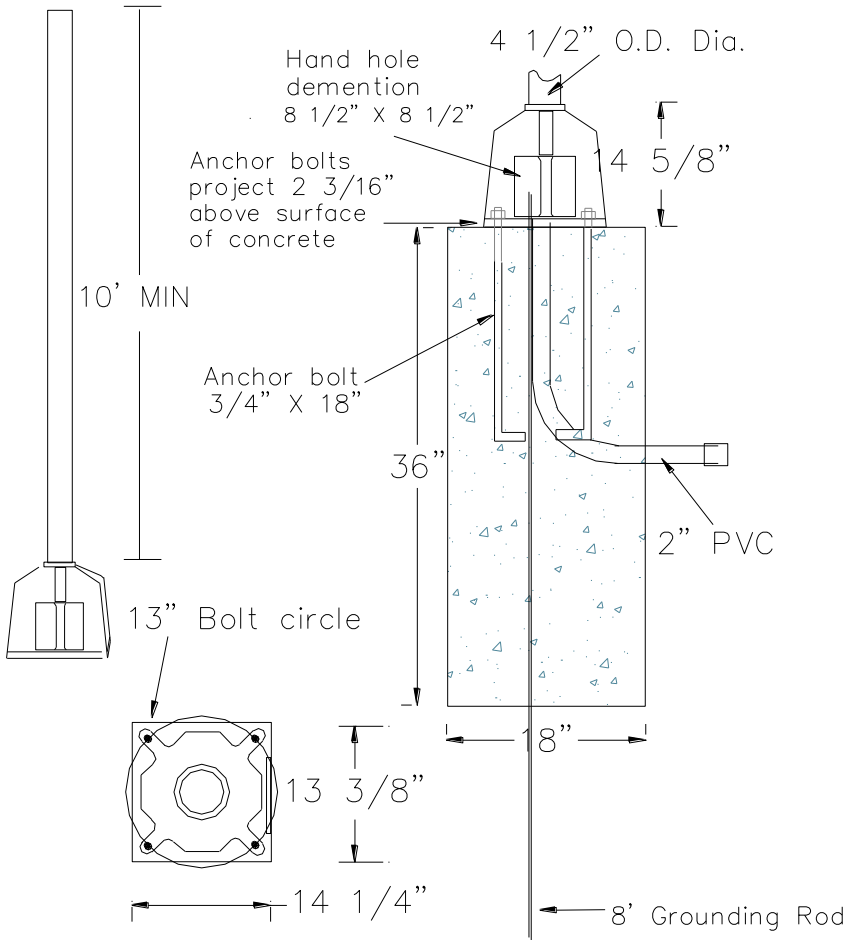

15.0 TRAFFIC SIGNAL SCHOOL FLASHER

Pole and pole base shall be made of steel and black powder coated Semi-Gloss Black during fabrication. Pole shall be schedule 40, 4.5 inches in diameter, 15' high and one end threaded for base. Threads shall be 4" NPSM. Unit shall have 3 flashing indications. 2 indications shall face motorists as they approach school zone and wig-wag. Solar panel bracket shall be mounted on top of pole. **All hardware shall be bolted to pole**

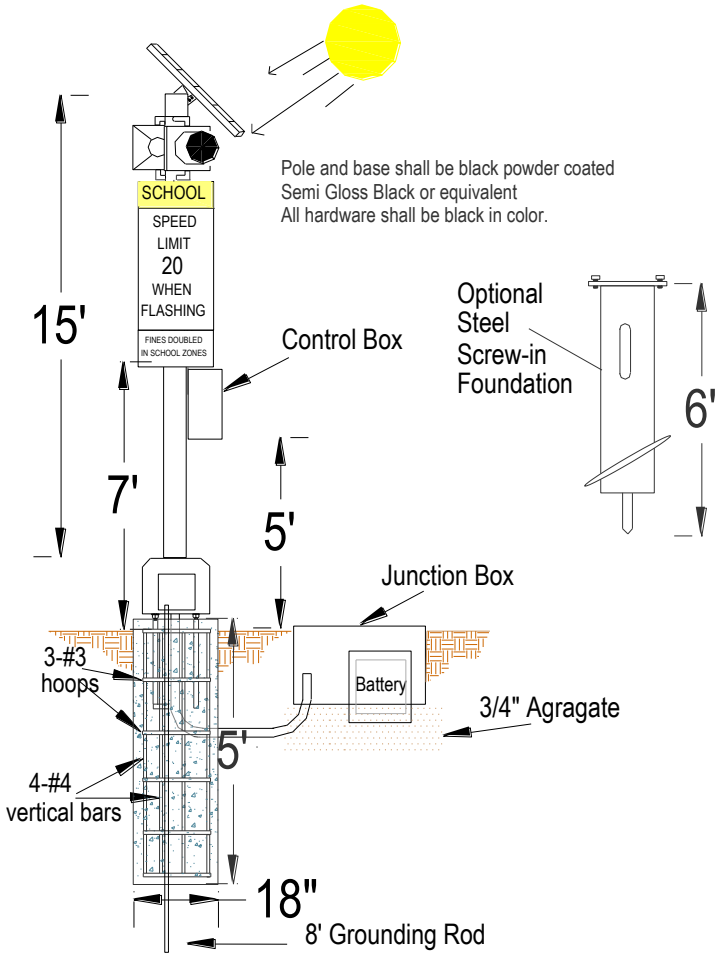

16.0 SCHOOL FLASHER FOUNDATION/CAISSON

Prior to pouring base:

- Tape conduit ends and oil bolt threads.
- Concrete shall be 4000 psi and vibrated.
- Base surface shall be smooth finished with steel trowel and have a light broom finish.
- Mark conduit runs on top surface of base.

FLASHER FOUNDATION

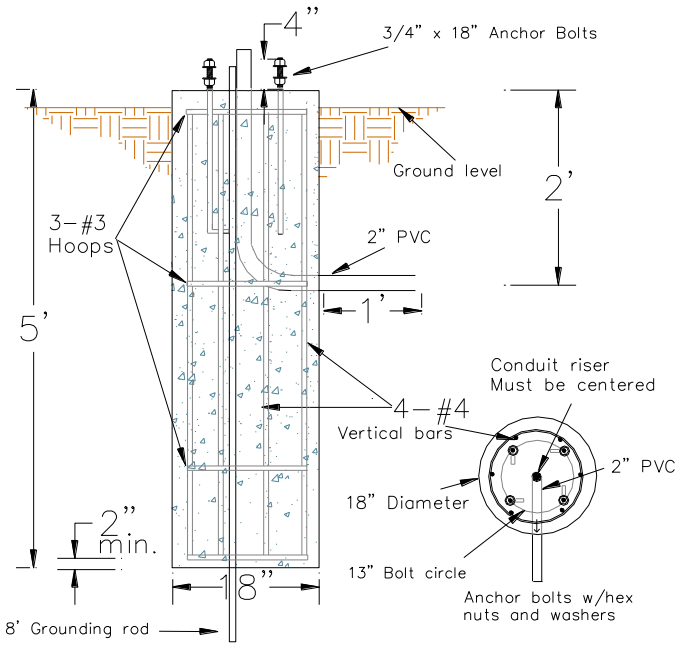

17.0 Power Meter Pedestal Specifications

17.1 Color to be standard gray.

17.2 Midwest #R101CP6HP or equivalent. Must supply a 30Amp single pole breaker for signal load. Breaker must be capable of receiving 6awg wire.

Procedure for power to an intersection:

1) Contact CSU field engineer (last page of Line Extention & Service Standards) assigned to area of work for power source. Temporary back up, contact Tim Wendt @ 719-668-4962

2) Obtain address from Regional Building, Flood Plain Division.

3) Call Traffic Signals at 719-385-6724 with address so account can be set up if new intersection.

4) Fill out load Data sheet and fax or mail to CSUtilities.

5) Obtain permit from Regional Building-to be done by contractor.

6) Call in for inspections: Done by contractor.

7) Regional will contact CSU, so that they can inspect the installation. To find out the status of the power, you can call 668-5524 with the address.

8) Complete process may take 2-3 weeks before a meter will be set after all inspections are passed.

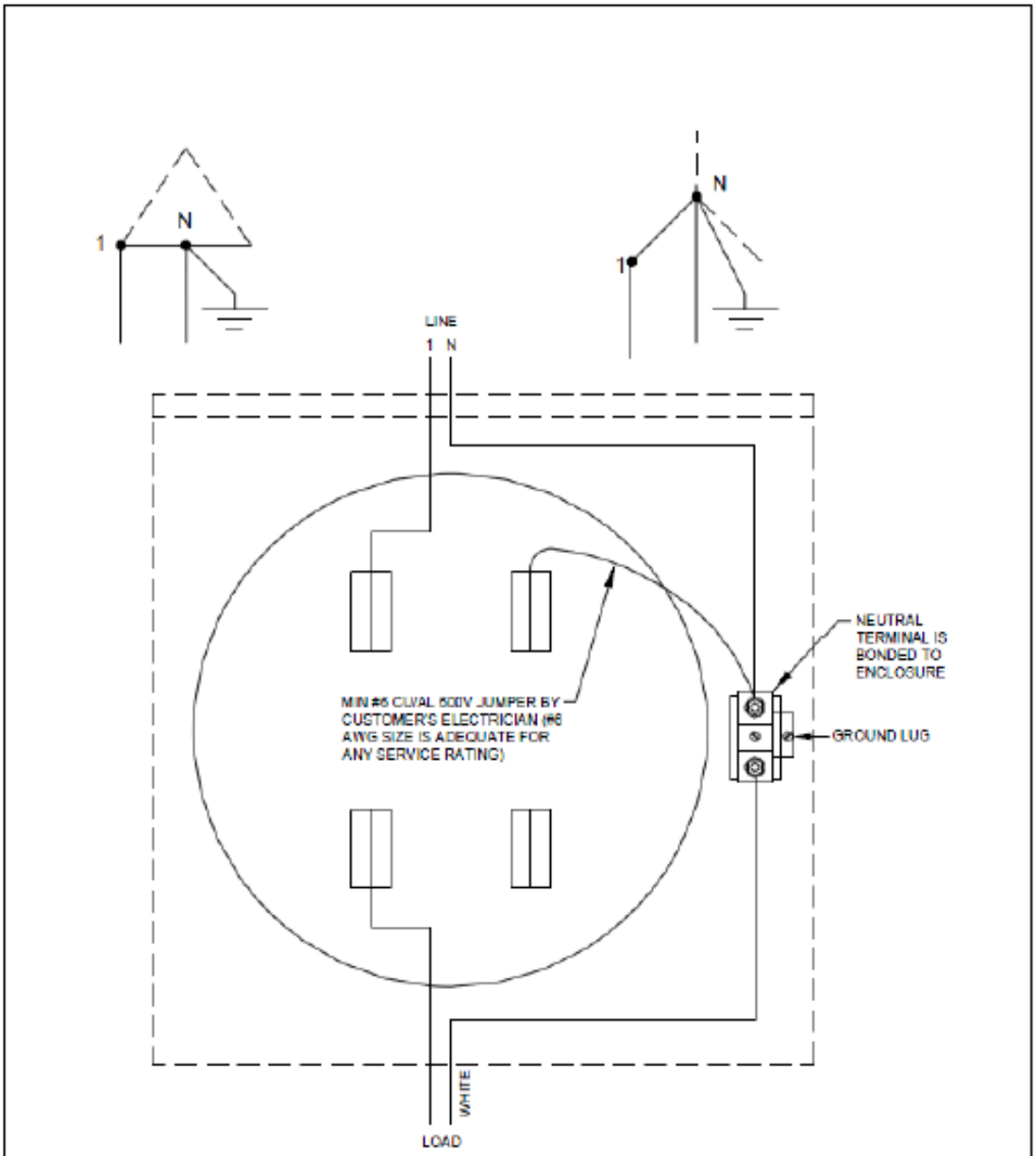

Single Phase, 2 Wire, 120 Volt
(100 Amp Traffic and Signal Pedestal)

MATERIAL SPECIFICATION

Colorado Springs Utilities
It's how we're all connected

APPROVED AS OF: 9/10/14	Single Phase Self-Contained Electric Meter Sockets	102-1	PG. 4/10

© Colorado Springs Utilities, 2014 - All Rights Reserved

17.3 **POWER RUNS** shall conform to Colorado Springs Utilities standards. Line Feed to meter shall have #6 AWG Stranded wire as a minimum. Meter pedestal to cabinet shall use #6 AWG Stranded wire in Black, White and Green.

18.0 SPECIFICATIONS FOR WIRE

18.1 **PPB-Paired Cable-Tray cable** shall be equivalent to IMSA specification 19-1. Cable shall be minimum 6 conductors of 18 AWG. Cable shall be black PVC jacketed (.030 inches) overall with polyethylene insulation. Cable shall be shipped on sturdy wooden spools of 1,000 non-interrupted feet. Cable shall be equipped with a ripcord.

18.2 **Signal Cables**; shall comply with IMSA specification 19-1. Conductors are to be 14 AWG, comprised of no less than 7 strands and will be untinned. Conductor insulation shall be polyethylene. The cable jacket shall be of polyvinyl chloride only, and may not be unduly rigid. Tracer colors shall be painted onto the wire insulation but must be unremovable and a spiral design is preferred. Cable shall be shipped 1,000 non-interrupted feet on spools. Larger shall be approved by installer or signal supervisor. Spools shall be sturdy and constructed of wood. Spools shall be non-returnable. Cable shall be equipped with a ripcord.

18.3 **Camera Video Cable/ Camera Power Cable:** Composite, 6 conductors-2 elements**;** 16 AWG 5-conductors bare stranded copper (conductor colors should be black, white, blue, red and brown), .016 polyethylene, 1 element equivalent to Belden 8281, video cable RG59/U-type with 2 braid shields and .030" PVC Jacket Black. This cable shall be suitable for installation in underground conduits or overhead with span wire applications. The coaxial cable, BNC connector and crimping tool shall be approved by Colorado Springs Traffic Engineering representative. Cable should be supplied on sturdy wooded reels in lengths of 1000' to 1500'. **Any video cable not supplied by City of Colorado Springs must be <u>pre-approved</u> before installation.**

18.4 **Power Wire** between vault and meter pedestal shall be a minimum #6 AWG THHN Stranded conductor or larger to meet voltage drop requirements. #6 AWG THHN to cabinet shall have Wire colors shall be Green-Ground, White-Neutral and Black-Hot. Conduit run shall maintain a depth of 30" per CSU standards.

18.5 **LED Streetlight wire;** the wire run down the pole from Cobra head shall be #10-3/C. This wire shall be fused at the hand hole using Single pole inline style U65 Breakaway Connector kit. Neutral wire shall be Copper C-clamped and taped appropriately.

18.6 **Equipment Grounding Conductor** (EGC) Use at least 10 gauge, insulated, green, stranded copper. Refer to "City of Colorado Springs Traffic Signal Grounding Methods" manual

18.7 **Ground pole using UFER ground technique**.

18.7.1 Grounding Electrode conductor (GEC)- at least 6gauge, Bare, solid copper.

18.7.2 Connect to rebar cage of concrete foundation using clamp suitable for submersion in concrete.

18.8 Advanced Detection Cable;OSP Broadband Category 5e.

18.9 Radio communication wire. 6-conductor or LMR-240.

19.0 GALVANIZED STEEL CABLE

19.1 Cable is to be comprised of seven (7) strands of galvanized steel cable of gauge required to bring outside nominal diameter to specifications. Galvanizing must be class "A" (.9 oz. zinc per square foot) and each wire must be individually galvanized prior to cable assembly. Steel cable is to be EHS and minimum breaking strengths are to be:
(3/16" 3,990 pounds)
(1/2" 26,900 pounds)

19.2 Cable is to meet ASTM A475; Grade 4, Style 1 x 7, Finish; Galvanized class A Specifications. Cable shall be shipped on sturdy, non-returnable spools of 1,000 feet each; coils of wire not on spools shall be unacceptable.

20.0 TRAFFIC SIGNALS ACCESSORIES-

20.1 CONDUIT RUNNING THREAD-1 ½" x 3' Galvanized steel or aluminum conduit running thread (NPSM) used to space between top of signal head and entrance fittings attached to the ½" span wire.

20.2 Universal Grade STRAND VISES-1/2", (Reliable #5254). To be used for ½", 7 strand galvanized steel cable.

20.3 Universal Grade STRAND VISES-3/16", (Reliable #5199). To be used for 3/16", 7 strand galvanized steel cable.

20.4 NOTE: Strand Vises to be attached to pole using supplied collars from manufacturer for span cables.

20.5 Typical attachment points for span wire connections. (½" strand vises to clamp on collars).

21.0 CONDUIT OUTLET BODIES & ACCESSORIES

21.1 **STANDARD MATERIALS-** Mark 9 - Copper Free Aluminum, 3” Sand-Cast.

21.2 **STANDARD FINISHES-**Mark 9 - Aluminum Cellulose Lacquer

21.3 **BLANK COVERS-**To be sheet steel for Mark 9 conduit outlet bodies.

21.4 **GASKETS-**Neoprene

21.5 **SERVICE ENTRANCE FITTINGS (WEATHER HEADS-**Fittings shall have a clamp type cap to fit rigid conduit of specified sizes. Preferably hot dip galvanized.

22.0 TRAFFIC SIGNAL HEADS – VEHICLE (ETL Certified LED's)

22.1 The housing shall be aluminum alloy and shall be of sectional construction to permit the installation of additional sections for future needs. The tops and bottoms of signal sections shall be flat for interchangeability and have a 2-inch diameter mounting hole. Each section should have a weep hole for drainage of moisture.

22.2 The door shall be die cast aluminum alloy, which shall be hinged at the left side with a substantial screw type fastener of stainless steel at the right side. The visor shall be of aluminum.

22.3 The door shall be gasketed to exclude dust and moisture.

22.4 Signal head and visors shall be powder coated. Color determined when ordered.

22.5 All gaskets shall be neoprene.

22.6 All signals shall have the terminal blocks in bottom half of red section with one common neutral.

22.7 All mast arm installations will have louvered backplates on each 3 & 4 section signal heads.

22.8 All signals to be packaged one (1) per carton.

22.9 Traffic signal heads shall conform to the Manual on Uniform Traffic Control Devices.

22.10 Visors shall be tunnel type, open at bottom and inside shall be dull black finish per MUTCD.

22.11 12" visors shall be 9 to 10 inches in length.

23.0 Expanded View LED modules. (ETL certification is required)

23.1 **All LED <u>BALL</u> signal modules (8 inch and 12 inch)** shall be fully compliant to the ITE VTCSH LED Circular Supplement specifications dated and adopted June 27, 2005 or the latest adopted version as listed on the ITE website at time of bid. Compliance to the ITE VTCSH-2 Interim Purchase Specification is not sufficient, and will not substitute for compliance to the ITE VTCSH LED Circular Supplement specifications. Evidence of full compliance is required.

23.2 **All LED 12 inch <u>Arrow</u> Signal Modules** shall be fully compliant to the omnidirectional specifications of the ITE VTCSH - LED Vehicle Arrow Traffic Signal Supplement adopted July 1, 2007.

23.3 **All LED <u>Pedestrian</u> Signal Modules** shall be fully compliant to the ITE PTCSI Part-2: LED Pedestrian Traffic Signal Modules specifications Version September 30, 2004, Adopted March 2004 or the latest adopted version as listed on the ITE website at time of bid.

23.4 In addition to, and in excess of the applicable ITE specification compliance, the on-board circuitry of all LED traffic signal modules shall include voltage surge protection, to withstand high-repetition noise transients and low-repetition high-energy transients as stated in Section 2.1.8, NEMA Standard TS 2-2003. In addition, the module shall comply with the following standards: IEC 1000-4-5 at 3kV with a 2 ohm source impedance, ANSI/IEEE C62, 41-2002; IEC 61000-4-12 (6kV, 200A, 100kHz ring wave).

23.5 All LED traffic signal modules shall meet (Fcc Title 47, Subpart B, Section 15 regulations for electrical noise).

23.6 All LED traffic signal modules shall conform to (MIL-STD-810F for blowing rain).

23.7 All LED traffic signal modules shall conform to (MIL-STD-883 test method 2007, for mechanical vibration).

23.8 All LED traffic signal modules shall conform to (MIL-STD-883 Test method 1010, Temperature cycling requirements).

23.9 The manufacturer must submit a data sheet showing the exact catalog numbers of the items submitted on the bid.

23.10 Warranty-Manufacturer shall provide at time of bid, a written warranty which provides for repair or replacement of modules that fail to function as intended due to workmanship or material defects within the first 60 months from date of delivery. Modules which exhibit luminous intensities less than the minimum as specified in the ITE specifications as indicated above, within the first 60 months from date of delivery shall be replaced or repaired by the manufacturer.

23.11 **Enclosure;** Shall be dust and water-resistant.

23.12 **Voltage;** Operating shall be between 80VAC and 135 VAC. Electronic circuitry shall assure proper operation of the load switch and monitor in the cabinet.

23.13 Maximum total harmonics current distortion (THD) shall be < 20%.

23.14 **Operating Temperature;** Between –40 degrees C and +74 degrees C.

23.15 **Lens:** Shall be replaceable, polycarbonate (UV stabilized “Lexan”) convex lens; meet ITE color standards; minimum of 1/8 “ thickness; and minimum light transmittance of 92%, free from bubbles, flaws and other imperfections. Non-polycarbonate red tinted lenses will be accepted provided that these meet ITE color standards. Chromacity shall be measured uniform across the face of the lens. Non-polycarbonate lenses shall also meet 3-1/2 foot tests.

24.0 PEDESTRIAN SIGNALS (Countdown only)

24.1 **GENERAL-** Construction design shall be compatible with clamshell mounting hardware. The general construction shall include a single piece cast aluminum housing, a single piece cast aluminum swing down door frame, **no Z-crate**, **a cut-away sun visor**, side-by-side incandescent look LED indications and other hardware.

Optically, the subject pedestrian signal shall be capable of displaying, brightly and uniformly, the alternate message symbols "HAND" in Portland orange and "WALKING PERSON" in white while being subject to strong ambient light conditions, the messages shall "Blankout" when the signal is not energized.

In order to facilitate installation and maintenance, the signal shall be designed so that all components are readily accessible from the front by merely opening the signal door.

24.2 **DIMENSIONS-**The maximum overall dimension of the signal shall be 18 1/8 inches wide, 18 ¾ inches high, and 9 inches deep and hinges. The distance between the mounting surfaces of the upper (non-shurlock) and the lower (shurlock) openings shall be 15 ¾ inches.

24.3 OPTICAL SYSTEM- The optical system shall consist of side-by-side LED indications with the incandescent look.

24.4 **All LED Pedestrian Signal Modules** shall be fully compliant to the ITE PTCSI Part-2: LED Pedestrian Traffic Signal Modules specifications.

24.5 A one-piece sponge neoprene gasket fitted around the perimeter such that a weatherproof seal is afforded whenever the reflector, lens, door, and case are properly mated.

24.6 **Housing-** The housing shall be a one-piece corrosion resistant aluminum alloy die-casting complete with integrally cast top, bottom, sides and back. The housing shall be dust proof, weatherproof and corrosion resistant. Four integrally cast hinge lug pairs, two at top and two at the bottom of each case, shall be provided for operation of a swing down door.

24.7 **Cut away sun visor-** Each pedestrian signal shall have a sun visor mounted to the metal door frame. Visor shall extend approximately 7" out from the head.

24.8 **Door Frame-** The door frame shall be a one piece corrosion resistant aluminum alloy die casting, complete with two hinge lugs cast at the bottom and two latch slots cast at the top of each door. The door shall be attached to the case by means of two Type 304 stainless steel spring pins. Two stainless steel hinged bolts with captive stainless steel wingnuts and washers shall be attached to the top of the case with the use of stainless steel spring pins. Hence, latching or unlatching of the door shall require no tools.

24.9 30 DEGREE ADJUSTMENT-The bolthole shall be elongated from side to side and the recessed shoulder shall be curved to allow rotation of the installed assembly 15 degrees in either direction from center for a total of 30 degrees (when installed on a 4-inch pole).

PEDESTRIAN SIGNALS continued

24.10 **CLAMSHELL MOUNTING HARDWARE-**Mounting hardware shall match the style of clamshell shown in section 24.17 “Clamshell Mounting Hardware”. Clamshell shall be delivered assembled on left or right side of unit.

24.11 **CONSTRUCTION-**The subject mounting hardware shall be a two piece, cast aluminum alloy assembly. The two separate castings shall be joined in the final assembly by the use of stainless steel spring pins. The spring pins shall be factory installed into the hinge ears that shall be integrally cast into the “pole half” of the assembly. Final mating of the two halves shall be accomplished by inserting the spring pins into the drilled hinge ears of the head half of the assembly (loose fit).

24.12 **APPLICABLE INSTALLATIONS-** The pole half of the assembly shall be designed to adapt to a wide range of pole configurations (4-inch minimum diameter). The pole-mating surface shall be configured much like terminal compartments used for conventional bracket mounting.

24.13 **ADAPTABLE MOUNTING-** Unit construction shall allow for through-bolt, bolt to tapped pole, lag screw, and band-it type mounting. Through-bolt mounting shall accept two ½ inch diameter hex head bolts located on 9 inch centers. A channel with a recessed shoulder shall be included to retain the bolt head (or nut) and thus prevent rotation. Clearance shall be provided on the mating half of the assembly such that the bolt can extend through the nut when it is desired to bury the nut and bolt end inside rather than bury the bolt head inside. (**Ped heads shall be mounted to the signal pole with bolts)**.

24.14 **Installation-**Units shall be installed on the back side of signal poles unless approved by traffic Engineering to mount differently.

24.15 **Powder coat Painting**-Prior to final assembly, the case, door frame and the mounting hardware shall be powder coated to specified color.

24.16 **WARRANTY**-The entire pedestrian signal (including message lens, case, door frame and the clamshell mounting hardware) shall be warranted for two years from the date of original shipment against defects in workmanship and/or materials.

24.17 CLAMSHELL MOUNTING HARDWARE

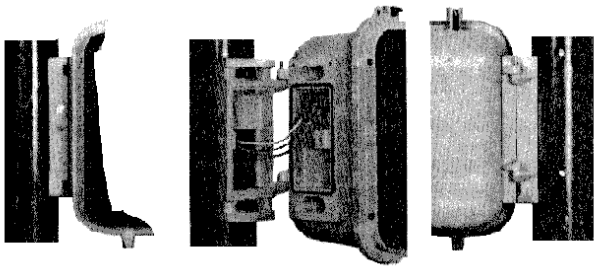

25.0 Break-away tether assembly (Pelco SE-5058-PNC)

25.1 Consists of cast aluminum threaded assembly to fit bottom of signal head. Assembly unit shall have single stud for tightening.

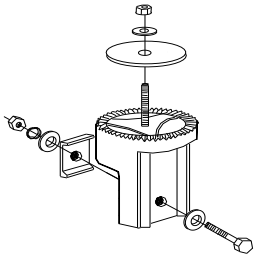

26.0 ENTRANCE FITTING/SIGNAL HEAD HANGERS

26.1 Entrance fitting is a casting that couples to signal head to lower end and has a drilled rib at top to connect to cable suspension clamp. Rib is to have a series of holes beginning at centerline of signal head connector to allow for correct positioning of off-balance signal head assemblies. Pinholes are to be designed for 5/8" pin. Rib shall not be more than .625 in thickness. Integral path for wire shall be free of sharp edges and constrictions and shall have a plastic bushing at its head. Threads in entrance fitting shall also be 1 ½" NPSM. Fitting shall have 5/16" NC set screw inside to prevent chase nipple loosening. Bottom of entrance fitting shall either bear serration's for standard 72 position signal grip or shall be equipped with locking washer bearing standard 72 position signal grip. **Shurlock rings shall be constructed out of metal or aluminum. Plastic shurlock rings shall not be used**. Chase nipple shall be grooved and shall include O-Ring to seal signal head. Both entrance fitting and chase nipple shall be malleable iron and shall be painted **gloss black**.

27.0 SPECIFICATIONS FOR SUSPENSION CLAMPS

27.1 Suspension clamps must be at least 7 inches long and is to be of malleable iron. Clamp and pin shall be galvanized (Class "A", .9 oz. zinc per square foot). Hole drilled in tangs for pin shall be 5/8" and 5/8" pin shall be supplied. Width between tangs shall be .70" +/- .025". Clamp bolts shall be "U" bolts with four (4) nuts and washers. "U" bolts, nuts, and lock washers shall be cadium plated. 5/8" pin shall be drilled for minimum 1/8" diameter cotter pin, which shall be, supplied cadium plated. Minimum ultimate strength shall be 16,000 pounds. Clamp is to be usable on either 3/8" or ½" stranded steel cable. Enterance fittings shall accept City of Colorado Springs standard all thread stock.

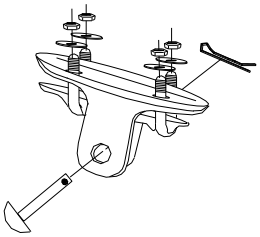

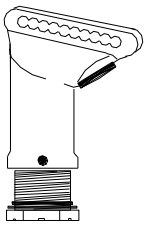

28.0 UPPER ARM ASSEMBLY (Pelco SE-5061-P)

28.1 Upper Arm Assembly must be used to mount five section left turn heads in a span wire configuration. This unit shall be universal to all signal heads with a 1 ½" serrate for Standard 72 position signal grip. Grip is to be compatible with Eagle Brand Signal Heads. Unit shall be complete as shown. Unit shall be metal and painted to specified color. **Upper arm assembly shall not be constructed of 1 ½" conduits with set screws**.

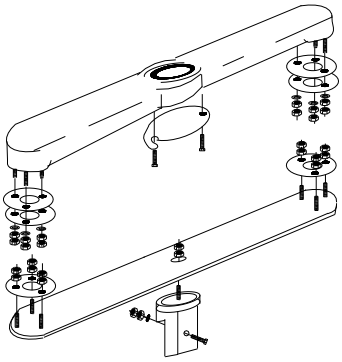

29.0 SINGLE HEAD-Side of pole Mounts

29.1 This bracket consists of a 1 ½" pipe nipple with an elbow at its end and a nipple and nut to retain the signal head. The pipe nipples are to be 1 ½" cast aluminum with 1 ½" NPSM threads. The nuts are to be hexagonal, 2 9/16" across the flats, threaded 1 ½" NPSM, and shall be constructed of cast aluminum. One nut shall be supplied for each nipple of the bracket. Conduit lock rings or nuts or chase nipples requiring special tools are not acceptable. The minimum overall length of the arm should be 12" c/c including hub. The elbows shall be cast aluminum, threaded 1 ½" NPSM and will have set screws to lock in place. The elbows shall be cast with serration's to position the head, or washers with serration's are to be supplied. Serrations are to be compatible with 72-position serrations on Eagle Brand signal heads. Brackets are to be shipped assembled and are to be painted. Each pair of brackets is considered a unit, as it requires two (2) for each mounting.

30.0 POLE MOUNT FITTINGS (BANDIT BRACKETS-Hub Plate)

30.1 Fittings to be cast aluminum, with guides for 1" or ¾" steel bands. Radius of standard bracket to accommodate large diameter poles. Single threaded hub to be 1 ½" NPSM, threaded completely through. Guides shall be drilled with a ½" hole for mounting the bandit bracket with 3/8" bolts.

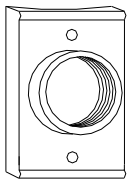

31.0 Mast Arm Mounting Bracket Assembly

31.1 Astro-Brac **(Pelco)**, one-way bracket assembly with clamp kit (Cable mount) and variable bracket assembly with clamp kit (cable mount).

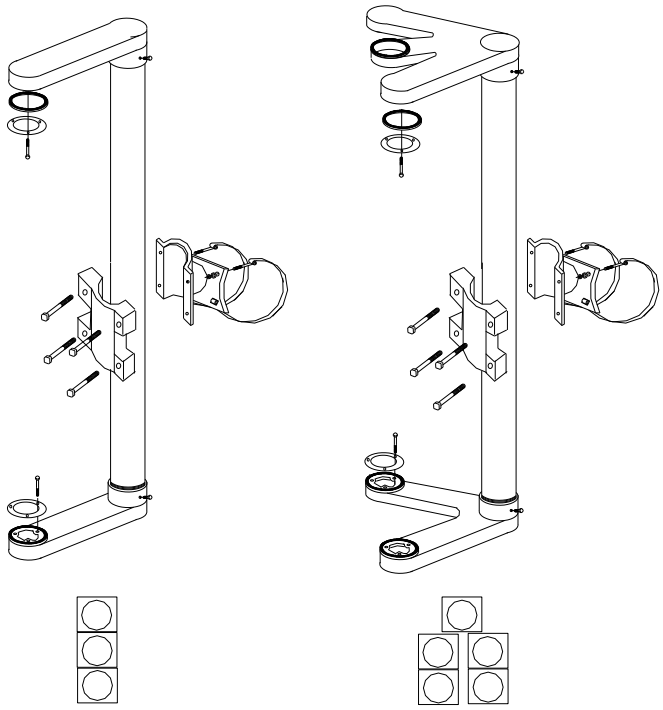

31.2 **General: One-way Bracket Assembly(Pelco)**

- Standard Band Bracket Assembly
- Arm Kit, standard 9”
- Cable mount.
- Gusseted Tube w/ Vinyl insert

31.3 **General: Variable Bracket Assembly**, **(Pelco)**

- 5-Sec. Cluster Assembly, band mount
- Arm Kit, 5-section cluster
- Cable mount
- Gusseted Tube w/ Vinyl insert

31.4 **General: Camera Mounting Bracket, 2-piece Adjustable Mount, (Pelco)**

- Bracket, Camera mount, 2-Piece tilt Pan, Alum
- Gusseted Tube w/vinyl insert, 1-1/2” TOE x length, Alum, Alodine
- Band mount w/Tube Saddle, Alum
- Cap, Tube, Black Semi-Gloss

32.0 PEDESTRIAN PUSHBUTTONS (Polara Bulldog III)

32.1 The pedestrian pushbutton shall be shockproof, waterproof, freeze proof and ADA compliant in design. Stainless steel button shall be pressure activated but withstand a hard impact. **Pushbuttons shall utilize Piezo driven solid state switch**. Standard 3" deep housing shall be used. Special purpose pushbuttons may be ordered on specific projects. See examples below.

32.2

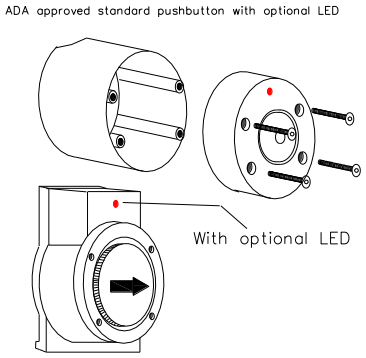

32.3 **Piezo pushbuttons**:

32.3.1 **Body Material**: Die-cast aluminum, powder-coated body, Powder coated gloss yellow..

32.3.2 **Actuator Button material:** Large, 2-inch**,** Stainless steel button pressure activated.

32.3.3 Warranty 5 year

32.3.4 **Piezo Driven Solid State Switch:** Cannot be made to stick on.
Operating Temperature: -30°F to +165°F.
Operating Voltage: 15-36VDC or 12-28VAC.
Switching Current: 10 micro amps.
Operating Life: Greater than 100 million operations.

32.3.4 **LED:** Color, Ultra Bright Red (Easily seen in daylight).
Luminous Intensity: > 1200 mcd
Optimum Viewing Angle: 160°
Momentary: LED provides approximately 0.1-sec flash each time button is pressed. Uses power from existing wires. Works with 12-24 VDC.

32.3.5 **Beeper:** Different tones for press and release – 2.3 kHz & 2.6 kHz.

33.0 JUNCTION OR PULLBOXES

33.1 The standard size pull boxes shall be approximately 30” long x 17” wide x 18” depth and be constructed of reinforced fiber or gray polymer concrete and reinforced by a heavy weave fiberglass. A large size pull box shall be approximately 36” long x 24” wide x 18” depth is used next to the controller cabinet that utilize underground conduit runs to feed mast arm configuration. A small size approximately 24” long x 13” wide x 18” depth may also be utilized in special applications.

33.2 Shall comply with Western Underground Committee (W.U.C.) Guide 3.6

33.3 Lids shall have Coefficient of Friction (ASTM C1028) >0.5 on the surface.

33.4 Removable bolt down lid shall be imprinted “TRAFFIC” and shall be secured with stainless steel hex-head bolts with washer. Drain holes shall be provided in bolt holes for easy removal of debris.

33.5 Applications are intended to be placed in residential sidewalks, roadway medians and behind curbs where no deliberate vehicular traffic is planned.

33.6 Lid loading shall be compliant with ATSM C857 (AASHTO) SCTE Tier 15.

33.7 Tier 15 Standards-

33.7.1.1	Vertical Load Rating	15,000 lbs
33.7.1.2	Vertical Test Load	22,500 lbs
33.7.1.3	Lateral Load Rating	800 lbs/sq.ft.
33.7.1.4	Lateral Test Rating	1,200 lbs/sq.ft.

33.8 Tier 22 Standard

33.8.1.1	Vertical Load Rating	22,500 lbs
33.8.1.2	Vertical Test Load	33,750 lbs
33.8.1.3	Lateral Load Rating	800 lbs/sq.ft
33.8.1.4	Lateral Test Rating	1200 lbs/sq.ft

34.0 ROCK FIBER CONTROLLER BASE. (<u>Used with CS332 cabinets</u>)

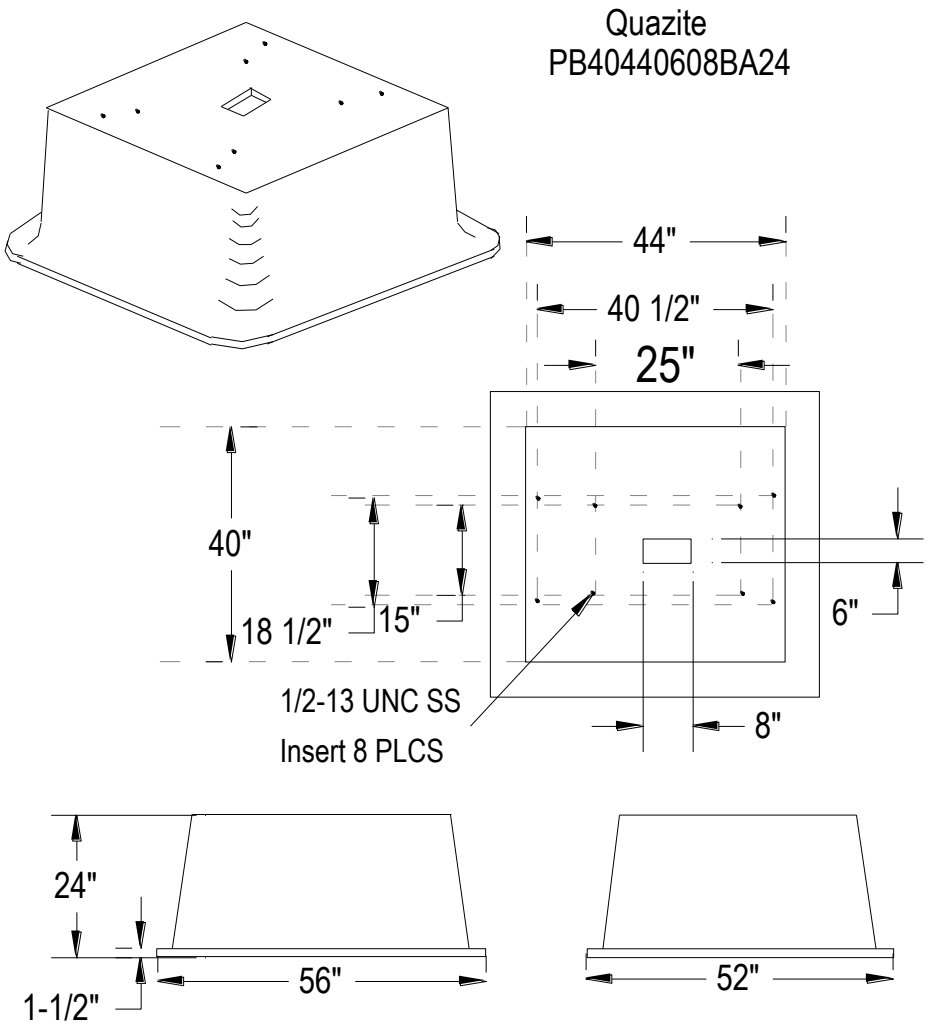

34.1 General:

- Description: Quazite PB4044BA24 or equivalent.
- Unit of Measure: Each
- Use: Traffic Signal controller foundation base

34.2 Material-Open bottom gray polymer concrete and reinforced by a heavy weave fiberglass

34.3 INSTALLATION: Base shall be level on a bed of crushed gravel (4" min depth) and should extend out of the ground 12". Check with Area Field Tech to field fit for elevation and orientation. Underground conduits shall remain 6" to 8" below the hole at the top of base.

34.4 Installation shall have a concrete pad in front and rear of cabinet which shalkl be the same with as the controller rock fiber base**.**

This Page Left Blank

35.0 Controller/Cabinet Specs:

332 C/S Cabinet System.

35.1 **Base mount cabinet**

- **332 CS** Natural alum cabinet system to include the following:
- 1-332 cabinet shell w/o police door. Shall be UL listed
- **1-330S rack assembly** (wired to Colo Spgs spec.)
- 1-Drop down shelf on front door
- 1-Duel Fans panel assembly (Quick release version)
- 3-LED lights. Two at the top and one lower left
- 2-corbin door locks and one hex handle
- 1-Red Monitoring Assembly
- 1-Flash Sence Modification
- 1-206L power supply.
- 1-Service Panel.
- 1- Auxilliary power panel w/GFI receptical.
- 1-Bus bar with DINrail terminal blocks mounted on the back rack.
- 1-RENO 2018 conflict monitor (WI-R-US/16)
- 1-215 bypass cable
- 7-FTR's
- 2-model 204 Flasher (PDC)
- 14-model 200 loadswitches (PDC)
- 2-242 DC Isolators (PDC)
- 1-ISM Controller (Supplied by City of Colorado Springs)

35.2 **Pole Mount Cabinets**:

- **330S CS** Natural alum cabinet system to include the following:
- 1-330S cabinet shell w/o police door. Shall be UL listed
- 1-330S rack assembly (wired to Colo Spgs spec.)
- 1-Fan panel assembly
- 1-corbin door locks
- 1-Red Monitoring Assembly
- 1-Flash Sence Modification
- 1-215 bypass cable
- 1-RENO 2018 conflict monitor (WI-R-US/16)
- 7-FTR's
- 2-model 204 Flasher (PDC)
- 14-model 200 loadswitches (PDC)
- 2-242 DC Isolators (PDC)
- 1-ISM Controller (Supplied by City of Colorado Springs)

35.3 Colorado Springs Specs = Flush Mount Handles and NO Police panel access. Contact Traffic signals shop for conformation on which cabinet will be used on each project.

35.4 Profile of SAFETRAN 332 C/S Cabinet System

Rack componets supplied to the City of Colorado Springs shall be assembled like the picture below. All components shall be consistent and interchangeable with existing cabinets in the field to maintain consistency throughout the City. Controller unit is proprietary ISM controller developed by City of Colorado Springs.

35.5 Controller Communications

Proprietary Radio pack & Antenna (Supplied by City of Colorado Springs)

36.0 VIDEO DETECTION SYSTEM

INTENT: The intent of the following specifications is to describe the minimum requirements for providing Video Detection System Components. Initially, the system shall be capable of providing presence vehicle detection at intersections. The video system shall be expandable without removing or replacing existing units.

OVERVIEW: Acceptable systems or components include that of manufacturer whose system has successfully passed a minimum 120 day City of Colorado Springs Traffic Engineering (CSTE) field test, provided such equipment meets all qualifying specifications identified herein. Using standard image sensor optics and in the absence of occlusion, the system shall be able to detect vehicle presence with 98% accuracy under normal conditions (day and nights), and 96% accuracy under adverse conditions (fog, rain, snow).

All items and materials furnished shall be new, unused, current production models installed and operational in a user environment and shall be items currently in distribution. The product algorithms shall have a proven record of field use at other installations for at least (3) years of service i.e., not including prototype field trials prior to installation.

GENERAL:

Video Vehicle Detection System-These technical specifications describe the minimum physical and functional properties of a video detection system. The system shall be capable of monitoring all licensed vehicles on the roadway, providing video detection for areas outlined in the construction drawings. The video detection system shall consist of the following:

- Video Processing Unit(s)
- Video camera(s) with IR filter, enclosure and sunshield
- Camera Lens
- Surge suppresser
- Power/Video Cable
- All other necessary equipment for operation

Hardware:

- The Video Processor Card shall be the most current version used by City of Colorado Springs. The processor card shall be modular by design and fit directly into Type 170/179 input files. The processor card shall be interchangeable without replacing or modifying existing units.

- The system shall control from 1 to 4 video processor cards allowing for 1 to 8 camera inputs.

- The system shall be designed to operate reliably in the adverse environment of roadside cabinets and shall meet or exceed all NEMA TS1 and TS2, as well as Type 170/179 environmental specifications.

- Ambient operating temperature shall be from –35 to +75 degrees Centigrade at 0 to 95% relative humidity non-condensing.

- The system shall be powered by 12-40 VDC and draw less than 2 amperes.

- The system shall utilize cabinet 24 VDC for rack mount installations or external 24 VDC for stand-alone shelf installations.

- Surge ratings shall be set forth in the NEMA TS1 and TS2 specifications.

- Serial communications shall be through an RS232 serial port. This port can be used for communications to a modem or laptop to upload/download detector configurations, count data and software upgrades. RS485 on the rear edge connector shall facilitate communications to other VIP boards.

- Each video processing card shall have 4 opto-isolated open collector outputs. Twenty (20) additional outputs shall be available via the expansion port. The outputs shall be programmed for signaling the presence, the arrival or the departure of vehicles in a minimum of 48 detection zones.

- Each video processing card shall allow for 20 digital inputs via the I/O Expansion port.

- 37.4.11 Each video processor card shall have error detection. An output contact will open if the video signal is bad or the processor card is not functioning properly. A user defined quality level will automatically put the processor card into a recall state in cases of severe degraded visibility (i.e., fog, blizzard, etc.). Normal detection resumes when visibility improves above the user defined quality level. Levels can be modified with a simple keyboard as well as time parameters for recall and normal operation.

- Operator selectable recall shall be available via the front panel. (Optional)

- A video select button on the front panel will switch between camera images of the card. (Optional)

- The video processor card should have 2 video inputs (RS-170 NTSC or CCIR composite video) and one video out.

- External surge suppression, independent of the video processor card shall separate the card from the image sensor.

- The video processor card should have separate indicators that indicate:

- **POWER**
- **I/O COMM**
- **VIDEO 1 & 2**
- **TX & RX**
- **OUT1- OUT4**

Functional Capabilities

- Real Time Detection

- Video processor card shall be capable of processing the video signal of 2 cameras. The video signal shall be analyzed in real time (30 times per second).

- The system shall be expandable up to 8 cameras that may be connected to different video processor cards and programmed independently.

- The system shall be capable of displaying detectors on the video image with associated outputs. Outputs/Inputs status will be indicated on the screen. Parameters will also include the ability to view raw video without any verbiage and/or detectors for surveillance purposes.

- Each processor card will detect within the view of the connected camera the presence of vehicles in user defined zones. Detectors available shall be presence, count, delay, extension, or pulse mode of either arrival or departure of vehicles. Delay and extension shall be defined between .1 - 99 seconds and pulse mode between 20ms-100ms in 20ms increments.

- The video processor card should be programmed without the use of a computer or keypad plugged into the video processor cards serial port will facilitate detector programming.

- Via the serial port, detector configurations can be uploaded or downloaded with a laptop computer and stored on disk.

Functional Capabilities continued

- Detectors may be linked to 24 outputs and 20 inputs using Boolean Logic features: AND, OR, NOT. It will be possible to generate conditional outputs based upon inputs from a controller.

- It shall be possible to make a detector directional sensitive. Options will include an omni-directional detector or a detector that only senses movement: from right to left, left to right, up to down or down to up as you look at the monitor.

- To facilitate “fine tuning” of detection zones a maximum of 10 lines and a minimum of 4 lines may be adjusted within the confines of the detector.

- All detectors and parameters can be changed without interrupting detection. For example: when one detector is modified all existing detectors continue to operate, including the one that is being modified. When the new position is confirmed, the new detector will enter a learning phase. Once the new detector is in function it will take over the job of the old one.

In this way, the detector is always fully operational with no interruption on any detector, even during modification. Learning phases for new detectors shall not exceed 10 seconds.

- Six detectors per input may be used as count detectors. Count detectors will detect and store count data at user-defined intervals of .5, 1, 5, 10, 15, 30 & 60 minutes. It should be possible for each video processor card to store up to 4000 intervals of count data in non-volatile memory.

- Associated software may be used with a PC to download count data and export to a spreadsheet. Software will also be used to upload/download detector configurations and update software versions of the video processor card.

IMAGE SENSOR- CAMERA

- The unit shall be a high resolution, 1/3" image format CCD camera, designed for professional video surveillance systems. Incorporating the latest in CCD technology, the video camera shall provide detailed video without lag, image retention, or geometric distortion.
- Temperature range — -10 to + 50 degrees C
- Humidity — 0% to 95% relative, non-condensing
- Dimensions — 83mm X 47mm X 47mm
- Weight — 7.1-oz (200g.)
- Camera mounting slots — 1/4-20, top and bottom
- Connectors — BNC for video out
- Lens mount — CS
Power-in / pressure screw
Lens / 6-pin miniature "DIN" style
- Finish — Off-white semi-gloss polyurethane
- Construction — All metal housing
- Rated input voltage — 24 VAC, 60 Hertz
- Voltage range — 21 to 30 VAC
- Nominal power — 6 Watts
- Imager — Interline transfer CCD 1/3" format
- Imager spectral response — 100% @ 550nm:
30% @ 400nm and 800nm
- Sync system — EIA RS-170
- Active picture elements — 768 H X 494 V
- Horizontal resolution — 580 TVL

- Sensitivity (2856 K)

		Usable Picture	**Full Video**
Scene Illumination	fc	0.012	0.08
	lx	0.12	0.8
Imager Illumination	fc	0.0015	0.01
	Lx	0.015	0.1

** F1.2 lens @ 75% highlight*

- Signal to noise ratio — More than 48dB 58 dB typical
- AGC — 30 dB
- Light range (AGC on) — 1,000,000:1 min. with f/1.4 to 360 auto-iris lens
- Video out — 1.0 volts peak-to-peak +/- 0.1 volt @ 75 Ohms
- Gray scale — At least 10 steps

CAMERA- LEN: Standard (Power Focus & Zoom)

CAMERA LENS – Standard View Power Zoom:
The camera lens shall be a Vari-Focal 6.5mm – 39mm. The lens shall use (2) two aspherical lenses for high-quality optics. The unit design shall be compacted utilizing a DC-iris, focus and zoom control.

- Image format — 1/3 inch
- Focal length — 6.5 - 39mm
- Iris — f/1.0
- Focusing range — 1.8m to Infinaty
- Back focus Length — 9.25mm
- Weight — 410g.
- Lens mount — CS
- Angle of view — 7 - 41 degrees
- Iris control — 6 Pin DC control, Auto
- Focus control — Motorized
- Zoom control — Motorized

IMAGE SENSOR- HOUSING

- The environmental housing shall be an aluminum enclosure designed for outdoor CCD camera installations.
- Temperature range — -40 to +50 degrees C
- Dimensions — 449mm x 97mm x 112mm
- Weight — 1.4kg
- Housing mounting — Three 1/4-20 tapped holes
- Camera mounting — Removable cradle assembly
- Cable entry — Three liquid-tight fittings that accept cable diameters of:
  One fitting - 2 to 7 mm
  Two fittings - 3 to 10 mm
- Finish — Off-white semi-gloss polyurethane
- Construction — Extruded aluminum housing, Aluminum rear-end cap, Aluminum front cap with glass face plate, and aluminum cradle. (A sunshield shall be included)
- Window — 3 mm thick glass that includes a thermostatically-controlled window and Heater/defogger strip
- Rated input voltage — 115 VAC 60 Hertz
- Voltage range — 108 VAC to 132 VAC
- Output voltage — 24 VAC 60 Hertz
- Nominal power — 30 Watts

- Enclosure protection Waterproof and dust-tight in a NEMA-4, IP65, enclosure Type 3

SURGE PROTECTION

- A video surge suppressor(s) shall be included with each camera, installed inside the traffic signal controller cabinet and properly grounded. The suppressor shall provide coaxial cable connection points to an EDCO CX06-BNCY or approved equal transient suppresser for each image sensor.
- Peak Surge Current (8 x 20 us) 5KA
- Technology Hybrid, Solid State
- Attenuation 0.1db @ 10Mhz
- Response Time <1 nanosecond
- Protection Line to Ground
- Shield to Ground (isolated shield modules)
- Clamp Voltage 6 volts
- Connectors BNC
- Impedance 75 Ohms
- Temperature -40 to +85 degrees C
- Humidity 0-95% non-condensing
- Dimensions 4.5” x 1.5” x 1.25”
- UL Listed UL 497B

Camera Cable / Power Cable:

- Composite, 6 conductors-2 elements**;** 16 AWG 5-conductors bare stranded copper (conductor colors should be black, white, blue, red and brown), .016 polyethylene, 1 element equivalent to Belden 8281 with .030” PVC Jacket Black. This cable shall be suitable for installation in underground conduits or overhead with span wire applications. The coaxial cable, BNC connector and crimping tool shall be approved by Colorado Springs Traffic Engineering representative. Cable should be supplied on sturdy wooded reels in lengths of 1000’ to 1500’ maximum. **Any video cable not supplied by City of Colorado Springs Shall be <u>pre-approved</u> before installation.**

INSTALLATION The following special conditions apply:

General Construction Notes:

- Power / Video cable shall be continuous from the controller cabinet to the video camera. Coaxial cable will be terminated at the surge suppressor before being connected directly to controller backboard. Power cable will be terminated into a fuse panel mounted at the PDA and connected to AUX 120 VAC+ on controller backboard. No splicing of video camera cable will be allowed. BNC plug connectors should be used at both the camera and cabinet ends.

- Contractor shall install the video detection system in compliance with the manufacture’s and City of Colorado Springs installation instructions and recommendations. The Contractor shall

install, make fully operational, and test the system as indicated on the intersection drawings and this specification.

- BNC plug connectors should be used at both the Camera and Cabinet ends. The coaxial cable, BNC connector and crimping tool shall be approved by the supplier of the video detection system and the manufacturer's instructions must be followed to ensure proper connection.

- Cameras will be mounted on a 6' ASTRO-BRAC bracket, or equivalent, attached to the mast arms at a location determined by City Traffic Signal.

BID ITEMS

Cabinet Pre-wire & Video Surge Suppressor Installation:

Included in this item is the cabinet pre-wire, including mounting surge suppressors (one for each camera at the intersection) onto an attachment plate and mounting the assembly to the cabinet, terminating the video cables & attaching them to the suppressors, installing of fuse assemblies, and routing of cables & wire in the cabinet. This work shall be done only after the contractor personnel has received training & is certified to do the work in a satisfactory manner by the City signal technicians.

Video Camera & Cable Installation-Overhead (Span-Wire Signals): The coax cable shall be installed as a continuous unbroken run from the camera into the cabinet. Also included is attaching the camera mounting brackets with 3 clamps per bracket, installing & hook-up of the camera, pointing at the approaching lanes as indicated by the site survey, securing and testing the installation. Contractor is responsible for miscellaneous items such as any required tape, tie straps, BNC connectors, OH rings, hand tools, etc., and are included in this item and shall not be paid for separately.

Video Camera & Cable Installation-In Conduits (Mast Arm Signals)

The coax cable shall be installed as a continuous unbroken run from the camera into the cabinet. Also included is attaching the camera mounting brackets Astro-Brac , installing & hook-up of the camera, pointing at the approaching lanes as indicated by the site survey. Miscellaneous items such as any required tape, cleaning minor amounts of debris from conduits, providing hand tools, etc. are included in this item and shall not be paid for separately.

WARRANTY

- The video detection system shall be warranted to be free of defects in material and workmanship for a period of two years from date of shipment delivery. During the warranty period, the supplier shall repair with new or refurbished materials, or replace at no charge, any product containing a warranty defect provided the product is returned FOB to the supplier's factory or authorized repair site. Product repaired or replaced under warranty by the supplier will be returned with transportation prepaid. This warranty does not apply to products damaged by accident, misuse, abuse, improper operation, service by unauthorized personnel, or unauthorized modification.

- During the warranty period, technical support shall be available from the supplier via telephone within 4 hours of the time a call is made by a user, and this support shall be available from factory-certified personnel or factory-certified installers.

- During the warranty period, updates to video image processor software shall be available from the supplier without charge.

- The supplier shall maintain an adequate inventory of parts to support maintenance and repair of the video detection system. These parts shall be available for delivery within 30 days of placement of an acceptable order at the supplier's then current pricing and terms of sale for said parts

- The supplier shall maintain an ongoing program of technical support for the video detection system. This technical support shall be available via telephone, or via personnel sent to the installation site upon placement of an acceptable order at the supplier's then current pricing and terms of sale for an onsite technical support services.

- Installation or training support shall be provided by a factory authorized representative. The video detection Supplier shall provide all documentation necessary to maintain and operate the system. All product documentation shall be written in the English language.

37.0 LED Roadway Lighting

- LED "Cobra-Head" Style luminaire.
- Manufacturer must have sold LED street lights in the US for minimum of 5 years.
- Manufacturer shall provide a minimum 5 year warranty.
- Luminaire shall be listed by a Nationally Recognized Testing Laboratory as suitable for wet location applications.

37.1 OPTICAL

Lumens range 11000-13000 Lumens to replace 250W HPS roadway
Photometric distributions Type III
Standard 4000K CCT/ 70 CRI minimum
IP66 rated LED light engines

37.2 ELECTRICAL

120-277V 50/60Hz operation
Drive current 1050mA
10kV/5kA Surge protection meets IEEE/ANSI C62.41, ANSI C136.2-2015

37.3 CONTROL

NEMA 3-pin photo control receptacale standard
7-pin photocontrol receptacale available

37.4 CONSTRUCTION

Cobra-head style design
Heavy-duty die-cast aluminum housing and door
Arm mount is adjustable from 1-1/4” to 2” (1-5/8” to 2-3/8”O.D.) diameter
Slip fitter with ± 5 degree of adjustment for leveling
Standard two-bolt/ one-bracket slip fitter
Corrosion resistant polyester powder paint, minimum 2.0 mil. thickness
Tool-less entry for easy installation and maintenance

37.5 WARRANTY

Ten-Year warranty

37.6 RATING and CERTIFICATIONS

UL and cUL Wet Location Listed
DesignLights Consortium® (DLC) Qualified Product1
Rated for -40_C to +50_C ambient (-40_F to +130_F ambient)
Certified to ANSI C136.31-2001 3G Vibration rating
Meets FCC Part 15, Subpart B, Class A Standards
Meets Buy American Requirements within ARRA
RoHS Compliant
Complies with ANSI: C136.2, C136.10, C136.14, C136.31, C136.15, C136.37

38.0 Stainless Steel Banding and Buckles

38.1 Stainless steel band, 5/8” wide, 0.030 thickness in 100’ rolls

38.2 5/8” Stainless steel Buckles 100 per box