REQUEST FOR PROPOSAL

Construction

R24-044MZ

Date issued: March 4, 2024

PROSPECT LAKE AERATION SYSTEM CONSTRUCTION

THE CITY OF COLORADO SPRINGS

This project is funded by a grant from the American Rescue Plan Act (ARPA)

The City of Colorado Springs requests Firm Fixed Price (FFP) proposals, as detailed in this Request for Proposal (RFP), for Prospect Lake Aeration System Construction

This RFP is posted to Rocky Mountain E-Purchasing BidNet Direct and the City of Colorado Springs' Procurement Services Website. It is available for all vendors free of charge, following free registration, at the Rocky Mountain E-Purchasing BidNet Direct website.

SUBMITTALS FOR THIS PROJECT WILL ONLY BE ACCEPTED ON THE ROCKY MOUNTAIN E-PURCHASING BIDNET DIRECT PLATFORM.

Please login to the following website to register (Free Registration) to submit a bid for this project. All required documents will be uploaded to the website.

https://www.bidnetdirect.com/

BIDNET Support

800-835-4603

Estimated Project Magnitude: $350,000.00 - $450,000.00

SECTION INDEX

SECTION I PROPOSAL INFORMATION

SECTION II PROPOSAL CONTENT

SECTION III EVALUATION FACTORS

SECTION IV SPECIAL CONTRACT TERMS AND CONDITIONS/SPECIAL SOLICITATION PROVISIONS

SECTION V EXHIBITS

SECTION VI SCHEDULES

SECTION I – PROPOSAL INFORMATION

1.0 PROPOSAL INFORMATION

Section I provides general information to potential Offerors, such as proposal submission instructions and other similar administrative elements. This RFP is available on BidNet Direct under the Rocky Mountain E-Purchasing Group (www.BidNetDirect.com). All addenda or amendments shall be issued through BidNet Direct and may not be available through any other source.

1.1 RFP SCHEDULE OF EVENTS

The upcoming schedule of events is as follows:

Event	**Date**
Issue Request for Proposal	March 4, 2024
Pre-Proposal Conference	March 12, 2024 1:00PM

We will hold a pre-proposal conference at Prospect Lake located at 427 Prospect Lake Drive Colorado Springs, CO 80906. This meeting is not mandatory. However all Offerors are encouraged to attend. See map below for meeting location. There is a parking lot in the area.

Cut Off Date for Questions March 22, 2024 1:00PM

All questions shall be submitted electronically via email to the following Contract Specialist.

Requests for Information, support and questions shall be directed to:

CONTRACT SPECIALIST Mike Zeller
CONTRACT SPECIALIST michael.zeller@coloradosprings.gov

DO NOT CONTACT ANY OTHER INDIVIDUAL AT THE CITY OF COLORADO SPRINGS REGARDING THIS SOLICITATION.

The only acceptable method of submitting questions is electronically via BidNet Direct. Faxes or physical mail delivery are not acceptable.

Proposal Due Date	April 5, 2024 2:00PM
Interviews (if applicable)	TBD
Award of Contract	EST April 12, 2024
Notice to Proceed	EST April 30, 2024

1.2 SUBMISSION OF PROPOSAL

Proposals are to be submitted electronically on BidNet Direct (www.bidnetdirect.com). Please review the submission requirements **well in advance** of submission date and time, and allow for ample time to upload each required document. It is recommended that Offerors begin the submission process at least one (1) day in advance of the proposal deadline.

Offerors are solely responsible to ensure all required proposal documents are uploaded and submitted correctly, and that a **confirmation number** is obtained upon successful submission. Customer support for BidNet Direct may be reached at (800) 835-4603.

*************************NO LATE OFFERS WILL BE ACCEPTED***********************

Date/Time: Proposals shall be received on or before 2:00PM April 5, 2024.

Identification of Proposal:

Proposals must be submitted to the BidNet Direct Procurement Platform (www.bidnetdirect.com). The solicitation number and Offeror name must be clearly marked within the proposal.

Proposal No.: R24-044MZ
Due Date and Time: April 5, 2024 2:00PM

Any offer that is submitted without being properly marked may be opened for identification prior to the deadline for receipt of proposals and then resealed.

1.3 NUMBER OF COPIES

Offerors shall submit **one (1)** softcopy to the BidNet Direct platform. Upon submission, all proposal documents shall become and remain the property of the City of Colorado Springs.

1.4 SPECIAL TERMS

Please note the following definitions of terms as used herein:

The term “City” means the City of Colorado Springs.

The term “Contractor” or “Consultant” means the Offeror whose offer is accepted and is awarded the contract to provide the products or services specified in the RFP.

The term “Offer” means the proposal.

The term “Offeror” means the person, firm, or corporation that submits a formal proposal or offer and that may or may not be successful in being awarded the contract.

The term “Project” refers to Prospect Lake Aeration System Construction.

The term “Request for Proposal” or “RFP” means this solicitation of a formal, negotiable proposal/offer. Any offer that is accepted will be the offer that is deemed by the City of Colorado Springs to be most advantageous in terms of the criteria designated in the RFP.

1.5 RFP OBJECTIVE

The objective of this RFP is to provide sufficient information to enable qualified Offerors to submit written proposals to the City of Colorado Springs. The RFP is not a contractual offer or commitment to purchase products or services. The Offeror may present options and variables to the scope while still meeting the minimum requirements of this solicitation. Innovative proposals/solutions are encouraged and considered in the selection and/or award.

All information included in proposals must be legible. Any and all corrections and or erasures must be initialed by Offeror. Each proposal shall be accompanied by a cover letter signed by an authorized representative of the Offeror. The contents of the proposal submitted by the successful Offeror may become part of any contract awarded as a result of this solicitation.

1.6 CONFIDENTIAL OR PROPRIETARY INFORMATION

If an Offeror believes that parts of an offer are confidential, then the Offeror must so specify. The Offeror must include in bold letters the term “CONFIDENTIAL” on that part of the offer which the Offeror believes to be confidential. The Offeror must submit in writing specific detailed reasons, including any relevant legal authority, stating why the Offeror believes the material to be confidential. Vague and general claims as to confidentiality will not be accepted. The City of Colorado Springs will be the sole judge as to whether a claim is acceptable. Decisions regarding the confidentiality of information will be made when requests are made to make the information public. All offers and parts of offers, which are not marked as confidential, will automatically be considered public information after the contract is awarded. The successful offer may be

considered public information even though parts are marked confidential.

1.7 AMENDMENTS

Amendments to this RFP may be issued at any time prior to the time set for receipt of proposals. Offerors are required to acknowledge receipt of any amendments issued to this RFP by returning a signed copy of each amendment issued. Signed copies of each amendment must be received on or before the time set for receipt of offers.

The City of Colorado Springs will post all amendments on BidNet Direct under the Rocky Mountain E-Purchasing Group (www.BidNetDirect.com). It is the Offeror's responsibility to check the website for posted amendments or contact the Contracts Specialist listed in RFP §1.1 to confirm the number of amendments which have been issued.

1.8 WITHDRAWAL OR MODIFICATION OF OFFERS

Any Offeror may modify or withdraw an offer in writing at any time prior to the deadline for submission of an offer.

1.9 ACCEPTANCE

Any offer received and not withdrawn shall be considered an offer, which may be accepted by the City of Colorado Springs based on initial submission without discussions or negotiations.

By submitting an offer in response to this solicitation, the Offeror agrees that any offer it submits may be accepted by the City of Colorado Springs at any time within 90 calendar days from the date of submission deadline.

The City of Colorado Springs reserves the right (a) to reject any or all offers,(b) to waive informalities and minor irregularities in offers received, and/or (c) to accept any portion of an offer if deemed in the best interest of the City of Colorado Springs. Failure of the Offeror to provide in its offer any information requested in the RFP may result in rejection of the offer for non-responsiveness.

1.10 PROPOSAL PREPARATION COST

The cost of proposal preparation is not a reimbursable cost. Proposal preparation shall be at the Offeror’s sole expense and is the Offeror’s total and sole responsibility.

1.11 AWARD

The City of Colorado Springs intends to make an award using the evaluation criteria listed in this RFP to determine the best value, considering all factors and criteria in the proposals submitted. Best value means the expected outcome of an acquisition that, in the City’s estimation, provides the greatest overall benefit in response to the requirements detailed in the RFP. The City of Colorado Springs reserves the right to reject any or all offers and to not make an award.

1.12 PERFORMANCE PERIOD

The performance period for the project detailed in this RFP will be established as
EST MAY 1, 2024 – OCTOBER 1, 2025..

1.13 DEBRIEFING

Offerors not selected may request a debriefing on the selection process as well as discussion of the strengths and weaknesses of their proposal upon receipt of notification that their offer was not selected.

A debriefing may be scheduled by contacting the Contracts Specialist listed above. The Contracts Specialist must receive a written request for debriefing no later than ten (10) calendar days after issuance of a notification that the Offeror's offer was not selected.

1.14 SUBSTANTIVE PROPOSALS

By responding to this RFP, the Offeror certifies (a) that Offeror's proposal is genuine and is not made in the interest of, or on behalf of, an undisclosed person, firm, or corporation; (b) that Offeror has not directly or indirectly induced or solicited any other offerors to put in a false or sham proposal; (c) that Offeror has not solicited or induced any other person, firm, or corporation to refrain or abstain from proposing an offer or proposal; (d) that Offeror has not sought by collusion to obtain for themselves any advantage over any other offerors or over the City of Colorado Springs; and (e) that Offeror has not violated or caused any person to violate, and shall not violate or cause any person to violate, the City's Code of Ethics contained in Article 3, of Chapter 1 of the City Code and in the City's Procurement Rules and Regulations.

1.15 OFFEROR'S QUALIFICATIONS

Each Offeror must complete Exhibit 6 – Qualification Statement.

No contract will be awarded to any Offeror who is in arrears to the City, upon any debt or contract, or who is in default, in any capacity, upon any obligation to the City or is deemed to be irresponsible or unreliable by the City based on past performance.

1.16 NON-COLORADO ENTITIES

If Offeror is a foreign entity, Offeror shall comply with C.R.S. section 7-90-801, "Authority to transact business or conduct activities required," and section 7-90-802, "Consequences of transacting business or conducting activities without authority."

Before or at the time that the contract is awarded to an entity organized or operating outside the State of Colorado, such entity shall obtain authorization to do business in the State of Colorado, designate a place of business herein, and appoint an agent for service of process.

Such entity must furnish the City of Colorado Springs with a certificate from the Secretary of the State of Colorado to the effect that a certificate of authority to do business in the State of Colorado has been issued by that office and is still valid. The entity shall also provide the City with a certified copy of the designation of place of business and appointment of agent for service of process from

the Colorado Secretary of State, or a letter from the Colorado Secretary of State that such designation of place of business and agent for service of process has been made.

1.17 PROCUREMENT RULES AND REGULATIONS

All projects advertised by the City of Colorado Springs are solicited in accordance with the City's Procurement Rules and Regulations. The City's Procurement Rules and Regulations can be reviewed and/or downloaded from the City website www.coloradosprings.gov. The Contracts Specialist may also provide a softcopy of the Rules and Regulations upon request. Any discrepancies regarding conflicting statements, decisions, irregularities, clauses, or specifications will be rectified utilizing the City's Procurement Rules and Regulations, when applicable. It is the Offeror's responsibility to advise the Contracts Specialist listed in this RFP of any perceived discrepancies prior to the date and time the offer is due.

1.18 FAIR TREATMENT OF OFFERORS

The City Procurement Services Division shall be responsible for ensuring the procurement of products, commodities, and services are in a manner that affords all responsible businesses a fair and equal opportunity to compete. If an Offeror believes that a procurement is not conducted in a fair and equitable manner, the Offeror is encouraged to inform the City Procurement Services Manager as soon as possible.

1.19 ORDER OF PRECEDENCE

Any inconsistency in this solicitation shall be resolved by giving precedence in the following order:

A. Sections I-IV of this Solicitation
B. Special Construction Terms and Conditions
C. General Construction Terms and Conditions
D. Exhibits
E. Plans
F. Detailed Plans
G. Standard Drawings
    a. Calculated dimensions will govern over scaled dimensions.
H. Special Specifications
I. Standard Specifications

1.20 SALES TAX

The successful Offeror, if awarded a contract, shall apply to the Colorado Department of Revenue for a tax-exempt certificate for this project. The certificate does not apply to City of Colorado Springs Sales and Use Tax which shall be applicable and should be included in all proposals. The tax exempt project number and the exemption certificate only apply to County, PPRTA (Pikes Peak Rural Transportation Authority), and State taxes when purchasing construction and building materials **to be incorporated into this project**.

Furthermore, the exemption **does not** include or apply to the purchase or rental of equipment, supplies or materials that **do not become a part of the completed project or structure**. In these instances, the purchase or rental is subject to full taxation at the current taxation rate.

The Offeror and all subcontractors shall include in their Offer City of Colorado Springs Sales and Use Tax on the work covered by the offer, and all other applicable taxes.

Forms and instructions can be downloaded at https://coloradosprings.gov/sales-tax/page/construction-contractors. Questions can be directed to the City Sales Tax Division at (719) 385-5903 or Construction_SalesTax@coloradosprings.gov.

Our Registration Numbers are as follows:
City of Colorado Springs
Federal I.D.: 84-6000573
Federal Excise: A-138557
State Sales Tax: 98-03479

1.21 BOND REQUIREMENTS

The Offeror is advised that the successful Offeror shall be required to furnish to the City of Colorado Springs, upon award, one copy of each: Performance Bond, Labor and Materials Payment Bond, and a Maintenance Bond in the amount of 100% of the total contract within ten (10) calendar days after notification of award of a contract. The cost of all bonds shall be included in Offeror's offer.

Bonds shall:

A. Be for the full amount of the contract price.
B. Guarantee the Contractor's faithful performance of the work under the contract, and the prompt and full payment for all labor and materials involved therein.
C. Guarantee protection to the City of Colorado Springs against liens of any kind.
D. Be, when a surety bond is furnished, from a surety company operating lawfully in the State of Colorado and be accompanied with an acceptable "Power-of-Attorney" form attached to each bond copy.
E. Be issued from a surety company that is acceptable to the City of Colorado Springs.
F. Be submitted using the forms in the Exhibit section of this solicitation.

1.22 INTERPRETATION OF QUANTITIES IN PROPOSAL FORM

Except as otherwise provided in this RFP, the quantities appearing in the proposal form are estimates prepared for the comparison of proposals.

After award, payment to the Contractor will be made in accordance with the following procedures:

A. Measurement required. When the Contract requires measurement of work performed or material furnished, payment will be made for actual quantities measured and accepted.
B. Measurement Not Required. When the Contract does not require quantities of work performed or materials furnished to be measured, payment will be made for the quantities appearing in the Contract.

The estimated quantities of work to be performed and materials to be furnished may be increased, decreased or omitted.

1.23 INTERPRETATION OF PLANS AND SPECIFICATIONS

Any change to proposal forms, plans, or specifications prior to the opening of proposals will be issued by the City in the form of an Amendment. Certain individuals may be named in the RFP that have authority to provide information, clarification or interpretation to Offerors prior to opening of proposals. Information obtained from persons other than those named individuals is invalid and shall not be used for proposal purposes.

1.24 EXAMINATION OF PLANS, SPECIFICATIONS, SPECIAL PROVISIONS, AND SITE OF WORK.

The Offeror is expected to examine the site of the proposed work, the proposal, plans, specifications, supplemental specifications, special provisions, and Contract forms, before submitting a proposal. The submission of a proposal will be considered conclusive evidence that the Offeror has made this examination and is aware of the conditions to be encountered in performing the work according to the Contract.

Boring logs and other records of subsurface investigations, if they exist, are available for inspection by Offerors. These logs and records are made available so that all Offerors have access to identical subsurface information that is available to the City, and is not intended as a substitute for personal investigation, interpretation, and judgment of the Offerors.

The City does not warrant the adequacy of boring logs and other records of subsurface investigations, and such information is not considered to be a part of the Contract. When a log of test borings is included in the subsurface investigation record, the data shown in the individual log of each test boring apply only to that particular boring and are not intended to be conclusive as to the character of any material between or around test borings. If Offerors use this information in preparing a proposal, it is used at their own risk, and Offerors are responsible for all conclusions, deductions, and inferences drawn from such information.

Offerors may conduct subsurface investigations at the project site at Offeror's expense; the City will afford them this opportunity prior to public opening of proposals.

If an Offeror discovers an apparent error or omission in the proposal form, estimated quantities, plan, or specifications, the Offeror shall immediately notify the Contracting Specialist to enable the City to make any necessary revisions. The City may consider it to be detrimental to the City for an Offeror to submit an obviously unbalanced unit proposal price.

1.25 COMBINATION OR CONDITIONAL PROPOSALS

If an RFP is issued for projects in combination and separately, the Offeror may submit proposals either on the combination or on separate units of the combination. The City reserves the right to make awards on combination or separate proposals to the advantage of the City. Combination proposals will be considered, only when specified.

1.26 ANTI-COLLUSION AFFIDAVIT

The Offeror by signing their proposal submitted to the City is certifying that the Offeror has not participated in any collusion or taken any action in restraint of free competitive bidding. This

statement may also be in the form of an affidavit provided by the City and signed by the Offeror. The original of the signed anti-collusion affidavit, if separately required and provided with the RFP, shall be submitted with the proposal. The proposal will be rejected if it does not contain the completed anti-collusion affidavit.

1.27 MATERIAL GUARANTY

The successful Offeror may be required to furnish a complete statement of the origin, composition, and manufacture of materials used in the construction of the work together with samples, which will be tested for conformance with Contract requirements.

SECTION II – PROPOSAL CONTENT

2.0 PROPOSAL CONTENT

A. Section II provides instructions regarding the format and content required for proposals submitted in response to this solicitation.

2.1 PROPOSAL FORMAT

Offeror's written proposal should include concise, but complete, information, emphasizing why the Offeror is best or best qualified to provide the required services. The Offeror's written proposal should include the information in the format outlined below and must be limited to no more than twenty-five (25) pages. **A page shall be defined as 8-1/2" x 11"; single sided, with one inch margins, and a minimum font of Times New Roman 10**. The only exception to the 8-1/2" x 11" paper size is the proposed project schedule. It may be submitted on 11" x 17" paper. Each 11" x 17" page for the schedule shall be counted in the overall page limitations above. Each section of the proposal should be labeled to clearly follow the requirements sections identified in this section of the RFP. The following listed Exhibits must be filled out and returned with the proposal and are not counted against the page limit:

Exhibit 1	Proposal Certification
Exhibit 3	Exceptions
Exhibit 4	Reserved See Schedule E
Exhibit 6	Qualification Statement
Exhibit 8	Federal Forms
Schedule A	Price Sheet
Schedule E	Insurance Requirements

2.2 COVER LETTER

The cover letter shall be no more than three pages. The cover letter shall contain at least the following information.

A. RFP Number and Project Name.
B. Statement that the Offeror is qualified to perform the work.
C. Certification Statement that the information and data submitted are true and complete to the best knowledge of the individual signing the letter.
D. Name, telephone number, email address, and physical address of the individual to contact regarding the proposal.
E. The signature of an authorized principal, partner, or officer of the Offeror.

2.3 PROPOSAL CERTIFICATION

The Offeror must fill out and submit Exhibit 1 with its Proposal.

2.4 ORGANIZATIONAL BACKGROUND AND OVERVIEW

The Offeror must provide a brief history and overview of its company and its organizational structure, with special emphasis on how this project will fit within that structure. Also include

principal place of business location(s), office locations, size of firm, and financial stability (annual public reports or private financial statements shall be included in an appendix or under separate cover; private financial information will be kept confidential by the City).

2.5 PROPOSAL NARRATIVE/TECHNICAL AND MANAGEMENT APPROACH

In the proposal narrative/technical and management approach section, the Offeror should explain what the Offeror will do and how it will perform if awarded a contract.

2.5.1 TECHNICAL AREA

The Offeror must explain its overall solution, considering the scope of work or statement of work provided. The content must include, but not necessarily be limited to, the following information.

A. Understanding of and Compliance with Technical Requirements

In the Technical Area, the Offeror should address each work area in sufficient detail to demonstrate a clear and full understanding of the work necessary to complete the project. The proposal should not merely parrot the requirements of the RFP. Further, the Offeror should provide evidence of sufficient planning to ensure the work is completed on schedule and within budget. It is highly recommended that the Offeror provide sufficient content and detail to answer completely the following questions:

1. Does the proposal demonstrate a contractor understanding of the requirements and goals of the Statement of Work, as well as industry standards and reasonable expectations for a company in the construction and lake management industry?
2. Does the proposal fully and completely address each requirement and goal of the Statement of Work?
3. Does the proposal provide solutions to indicate that requirements and goals will be met on schedule? Does the proposal address meeting the City's schedule requirements?
4. Does the proposal address limiting the impact on park operations?
5. Does it generally appear that the Offeror knows and thoroughly understands the building and aeration system requirements in RFP?

B. Project Approach

In the Technical Area, the Offeror should clearly present proposed solutions and indicate that it has performed adequate planning to accomplish project tasks as defined in the Statement of Work. Innovations, efficiencies, and detailed specifics are all encouraged.

The Offeror must at least address the following areas:

1. Construction phasing and traffic control for the project. Explain the phases, traffic control for each phase, and the logic in the construction phasing.
2. Erosion and sediment control during all phases of construction as well as post construction efforts through permit closure.
3. Coordination with utilities. Discuss Offeror's understanding of the key utility

relocations required for this project and how Offeror will coordinate and phase construction to both facilitate and accommodate those relocations and the constraints that they impose.

4. Schedule Management. Discuss Offeror's approach to schedule management including updating and reporting progress of the work.
5. Quality Control. Discuss Offeror's quality control plan, processes and approach to ensure that the City receives a quality product.
6. Safety. Discuss Offeror's approach and commitment to safety for both construction workers and the public traveling through the construction site.
7. Potential issues that Offeror foresees with this project and how Offeror would make adjustments if encountered. Describe factors limiting construction phasing flexibility and potential remedies.

It is highly recommended that the Offeror provide sufficient content and detail to answer completely the following questions.

1. Does the proposal include a complete plan to accomplish each requirement, including subcontracting (if applicable)?
2. Does the proposal demonstrate that appropriate and qualified personnel and equipment will be provided to carry out the requirement?
3. Is the proper level of effort directed toward each requirement? Does the level of effort look unrealistically low or unreasonably high?

2.5.2 MANAGEMENT AREA

The Offeror must explain its method of managing the work to be performed. The content must include, but no necessarily be limited to, the following information.

A. Program Management Controls

In the Management Area, the Offeror should provide:

1. A plan of operation, to include management of personnel, workload, schedule, and budget
2. An organization chart which demonstrates clear and effective lines of authority, responsibility, and communication for management, supervisory, and technical personnel. The plan should address which job classification or personnel will be assigned to each task and how that determination is made. Basic human resource management concepts should be addressed, including hiring, firing, discipline, incentive plans, etc.
3. If the Offeror plans to subcontract more than 10% of the work, include information on how the Offeror plans to manage its subcontractors.
4. A detailed construction schedule for the project showing the key construction activities and how they will meet or improve the City's timeframe and maximize construction efficiency to provide the best value to the City and minimize impacts to the public. The schedule shall be based on the Offeror's understanding and approach to the work as addressed above. Schedules should address controls to ensure the project will remain on schedule and on budget. Schedules submitted for this project shall assume a start date of May 1, 2024.

It is highly recommended that the Offeror provide sufficient content and detail to answer completely the following questions.

1. Does the proposal address the issues above in sufficient detail to demonstrate a sophisticated and mature management control system?
2. Are program management controls consistent with the technical portion of the proposal, especially regarding schedule and level of effort?
3. Do the plan and controls indicate that the Offeror will obtain, keep, and efficiently utilize high-quality personnel?
4. Does the proposal explain how the Offeror will address corrective actions in case of delays (e.g. expediting materials, additional resources, etc.)?
5. Does the proposal explain how the Offeror will remain within schedule and budget?

B. Past Performance/Relevant Experience and Key Personnel

In the Management Area, the Offeror should provide at least three references or name contracts demonstrating that it successfully provided services/products that are the same or similar to those required in the RFP. The proposal should adequately explain how the projects were completed on schedule and within budget. It is highly recommended that the Offeror provide sufficient content and detail to answer completely the following questions.

1. Does the proposal include at least three references or past performance citations?
2. Are the references or past performance citations relevant to the requirements of the Statement of Work of the RFP?
3. Does the Offeror explain how they were successful on the projects provided as past performance?
4. Does the Offeror apply the past performance to the City requirement in such a way as to demonstrate added value due to experience?

C. Key Personnel

In the Management Area, resumes must be provided for all personnel considered key, as required by the RFP. Resumes do not count toward the page limit. It is highly recommended that the Offeror provide sufficient content and detail to answer completely the following questions. Explain how the key personnel were related to the projects cited as relevant past performance.

1. Does the Offeror provide complete resumes, including education, experience, background information, accomplishments, and other pertinent information?
2. Does the Offeror provide resumes for all key personnel, as required by the RFP?
3. Do the resumes demonstrate adequate professional, technical, and management levels to accomplish the work effectively and efficiently?

2.6 PRICE AREA

In the Price Area, the Offeror should provide a detailed breakdown of the price for each year of performance. The price must be all-inclusive and include all unit costs for material, labor, other

direct costs (e.g. travel), indirect costs (i.e. overhead and general and administrative costs), and profit/fee. Offers must include sufficient detail to allow insight into the fairness and reasonableness of the price. If the contract type will be Time and Material (T&M) labor categories, labor rates, separated profit, and estimated material costs must be included in detail.

In addition, although price may not be the most important factor, it is still very important to the City of Colorado Springs. The Offeror's pricing must be competitive as compared to the budget amount, market pricing in the industry, and the pricing of other Offerors. It is highly recommended that the Offeror provide sufficient content and detail to answer completely the following questions.

1. How does the price compare to the industry competition?
2. If low, is it unrealistically low?
3. If high, is there demonstrated added value for the additional cost?

2.7 PROPOSAL PRESENTATION

Presentation is an important factor. Offerors should provide a highly professional product, which is complete, accurate, easily understood, and effectively presented.

2.8 EXCEPTIONS

All Offerors must complete Exhibit 3, Exceptions Form and return it with their proposal. Some terms and conditions are not negotiable. Exceptions may be grounds for rendering the proposal unacceptable without further discussions.

2.9 INSURANCE REQUIREMENTS

All Offerors must complete Exhibit 4, Minimum Insurance Requirements and return with their proposal. Lack of responsiveness in this area may be grounds for rendering the proposal unacceptable without further discussions.

SECTION III – EVALUATION FACTORS

3.0 EVALUATION AND AWARD

Section III provides information regarding evaluation criteria and scoring. It also includes information regarding proposal selection and award of the resultant contract.

3.1 EVALUATION CRITERIA

3.1.1 TECHNICAL AREA – UNDERSTANDING OF AND COMPLIANCE WITH TECHNICAL REQUIREMENTS

See Section II - Item 2.5.1A

3.1.2 TECHNICAL AREA – PROJECT APPROACH

See Section II - Item 2.5.1B

3.1.3 MANAGEMENT AREA – PROGRAM MANAGEMENT CONTROLS

See Section II - Item 2.5.2A

3.1.4 MANAGEMENT AREA – PAST PERFORMANCE/RELEVANT EXPERIENCE/KEY PERSONNEL

See Section II – Item 2.5.2B

3.1.5 PRICE/COST AREA – PRICE/COST

See Section II – Item 2.6

3.1.6 PROPOSAL PRESENTATION AREA – PROPOSAL PRESENTATION

See Section II – Item 2.7

3.1.7 EXCEPTIONS AND INSURANCE

See Section II – Items 2.8 and 2.9

3.2 RANKING

A. The order of ranking or importance in the evaluation shall be as follows:

First: Price/Cost Area
Second: Technical Area
Third: Management Area
Fourth: Proposal Presentation Area

B. Possible scores for each criterion shall be as follows:

5 – Exceptional
4 – Very Good
3 – Satisfactory
2 – Marginal
1 – Unacceptable

C. Definitions for scoring are as follows:

Exceptional – The proposal meets all and exceeds many of the requirements of the RFP to the benefit of the City, and the information provided is of such a nature as to answer all questions without need for further inquiry. There are no corrective actions required, and no compromise of requirements is needed.

Very Good – The proposal meets all and exceeds some of the requirements of the RFP to the benefit of the City, and the information provided is of such a nature as to answer most questions without need for further inquiry. There are no corrective actions required, and no compromise of requirements is needed.

Satisfactory – The proposal meets the requirements of the RFP, and the information provided is of such a nature as to answer many questions without need for further inquiry. There are very few corrective actions required, and no substantive compromise of requirements is needed.

Marginal – The proposal does not meet some of the requirements of the RFP, and the information provided is of such a nature as to require some clarification. There are some corrective actions required, and some non-substantive compromise of requirements is needed.

Unacceptable – The proposal does not meet many of the requirements of the RFP, and the information provided is of such a nature as to require much clarification. There are many corrective actions required, and substantive compromise of requirements is needed.

D. Final/Overall Scoring

The final proposal score will be determined by adding the area scoring. The sum of the area scores will be the final/overall score.

3.3 SELECTION COMMITTEE

A selection committee will review all proposals. Through this process, the City will determine which proposals are acceptable or unacceptable. The City will notify, in writing, the Offerors whose proposals are deemed to be unacceptable. Those Offerors offering proposals deemed to be acceptable by the City will be evaluated and scored by the selection committee. This scoring will determine which Offerors are considered to be in the competitive range and may be the basis for an award decision without further steps.

If the selection committee elects not to award based upon evaluation scoring, it may engage in a forced elimination process. To inform this process, it may require oral presentations or interviews with the Offerors considered to be in the competitive range. If oral presentations or interviews are conducted, they may also be scored, or they may simply be considered as information supporting the forced elimination process. The selection committee may request revisions to the proposal from each of the Offerors at the conclusion of the interviews. The intent of the forced elimination process is to reach consensus. The decision will be based on all relevant factors, and based upon perception of best value. The final decision may or may not exactly reflect scoring ranking.

The City also reserves the right to request best and final offers from all Offerors at any point in the proposal evaluation process.

3.4 AWARD OF CONTRACT

It is anticipated that there will be negotiations or discussions with Offerors. However, the City reserves the right to award without negotiations or discussions. The City also reserves the right to award a contract not necessarily or merely to the Offeror with the most advantageous price. The City intends to award to the Offeror that demonstrates the best value to the City and the most substantiated ability to fulfill the requirements contained in this Request for Proposal. A contract prepared by the City will be finalized and/or negotiated with the successful Offeror. In the event a contract cannot be negotiated with the top ranked Offeror, the City may enter into negotiations with the second highest ranked Offeror, or the City may decide to call for new proposals. Immediately after the notice of award, the successful Offeror will begin planning in conjunction with the City of Colorado Springs staff (to be designated by the City) to ensure fulfillment of all its obligations. The successful Offeror may be expected to attend regular meetings as required by the City to assist in the preparation for startup.

SECTION IV – SPECIAL CONTRACT TERMS AND CONDITIONS

4.0 SPECIAL CONTRACT TERMS AND CONDITIONS/SPECIAL SOLICITATION PROVISIONS

In addition to the special contract terms and conditions listed below, the City's sample contract, see Exhibit 2, contains contract terms and conditions.

ADA Standards: It is a requirement of the City and required by law that any new or renovated facility meet the scoping and technical requirements of the 2010 ADA Standards for newly designed and constructed or altered local government facilities, public accommodations, and facilities. The selected Design Professional shall design the project so it both conforms to the 2010 ADA Standards, as applicable and as amended, and is readily accessible to and usable by individuals with disabilities. The selected Contractor shall build the project so it both conforms to the 2010 ADA Standards, as applicable and as amended, and is readily accessible to and usable by individuals with disabilities. Facilities that are designed, constructed, and/or altered facilities that meet or exceed the IBC 2015/ANSI A117.1 2009, used by Pikes Peak Regional Building Department, will be accepted as meeting or exceeding the 2010 ADA Standards.

SECTION V – EXHIBITS

5.0 EXHIBITS

Exhibit 1	Proposal Certification
Exhibit 2	Sample Contract
Exhibit 3	Exceptions
Exhibit 4	RESERVED See Schedule E – Insurance Requirements
Exhibit 5	RESERVED See Schedule D – Scope of Work
Exhibit 6	Qualification Statement
Exhibit 7	Evaluation Scoresheet
Exhibit 8	Sample Bonds
Exhibit 9	Notification of Utilities

EXHIBIT 1 PROPOSAL CERTIFICATION

Check or Mark the space after each number to indicate compliance.

1. _____ Address of Offeror's Principal Place of Business:

_____

_____

Does Offeror have an established office or facility in Colorado Springs?

Yes _____ No _____

If yes, indicate address below if different than Principal Place of Business.

Colorado Springs Facility - Year established _____

Address of Colorado Springs Facility:

_____

_____

Percent of Work to be Performed from Principal Place of Business? _____

Percent of Work to be Performed from Colorado Springs Facility? _____

2. _____ Indicate your ability to provide a certificate of insurance evidencing the required coverage types and limits specified in Minimum Insurance Requirements Exhibit. (The certificate of insurance must reflect the City of Colorado Springs as an Additional Insured, as applicable.)

Indicate your ability to comply with the following requirements:

The City shall be added as an Additional Insured to all liability policies:

Yes _____ No _____

Your property and liability insurance company is licensed to do business in Colorado:

Yes _____ No _____

Provide the name of your property and liability insurance company here:

Name: _____

Your property and liability insurance company has an AM best rating of not less than B+ and/or VII:

Yes _____ No _____

Worker's Compensation Insurance is carried for all employees and covers work done in Colorado:

Yes _____ No _____

3. _____ Provide one (1) copy of current financial statements (if required). Enclose financial information in a separate envelope; do not bind with the other proposal copies. If review of the information is to be restricted to the City's financial officer, it must be marked accordingly.

4. _____ Provide the completed and signed bid. (Bids must be identified as specified in this RFP document). All required Exhibits are attached.

By signing below, the Offeror certifies that no person or firm other than the Offeror or as otherwise indicated has any interest whatsoever in this offer or any Contract that may be entered into as a result of this offer and that in all respects the offer is legal and firm, submitted in good faith without collusion or fraud. The undersigned additionally declares that it has carefully examined the Bid information and the complete Solicitation prior to submitting a Bid. The Bidder's signature will be considered the Bidder's acknowledgement of understanding and ability to comply with all items in the solicitation.

Offeror has appointed _____ as the Offeror's representative and contact for all questions or clarifications in regard to this Offeror.

Telephone: (___) _____

Email: _____

The undersigned acknowledges and understands the terms, conditions, Specifications and all Requirements contained and/or referenced and are legally authorized by the Offeror to make the above statements or representations.

_____	_____
(Name of Company)	(Signature)
_____	_____
(Address)	Date
_____	_____
(City, State and Zip)	(Telephone Number)
_____	_____
(Name typed/Printed)	(Title)
_____	
(E-Mail Address)	

FEDERAL TAX ID #_____
This Company Is: Corporation___ Individual____ Partnership____ LLC____

Offeror hereby acknowledges receipt of the following amendments, if applicable. Offeror agrees that it is bound by all Amendments identified herein.

AMENDMENT #1_____ DATED:_____

AMENDMENT #2_____ DATED:_____

AMENDMENT #3_____ DATED:_____

Please Note: the following Representations and Certifications must be initialed by Offeror in the spaces provided and returned with this certification.

1. INSURANCE REQUIREMENTS

Offeror shall comply with all insurance requirements and will submit the Insurance Certificates prior to performance start date. If limits are different from the stated amounts, Offeror shall explain variance. Certain endorsements and "additionally insured" statements may require further clarification and specific statements on a project specific basis and should have been described in the Offeror's Bid.

_____
Initials for 1

2. ETHICS VIOLATIONS

A. The Offeror shall have in place and follow reasonable procedures designed to prevent and detect possible violations described in this clause in its own operations and direct business relationships.
B. Offeror certifies the Offeror has not violated or caused any person to violate, and shall not violate or cause any person to violate, the City's Code of Ethics contained in Article 3, of Chapter 1 of the City Code and in the City's Procurement Rules and Regulations
C. When the Offeror has reasonable grounds to believe that a violation described in this clause may have occurred, the Offeror shall promptly report the possible violation to the City Contracts Specialist in writing.
D. The Offeror must disclose with the signing of this Bid, the name of any officer, director, or agent who is also an employee of the City and any City employee who owns, directly or indirectly, an interest of ten percent (10%) or more in the Offeror's firm or any of its branches.
E. In addition, the Offeror must report any conflict or apparent conflict, current or discovered during the performance of the Contract, to the City Contracts Specialist.
F. The Offeror shall not engage in providing gifts, meals or other amenities to City employees. The right of the Offeror to proceed may be terminated by written notice issued by City Contracts Specialist if Offeror offered or gave a gratuity to an officer, official, or employee of the City and intended by the gratuity to obtain a contract or favorable treatment under a contract.
G. The Offeror shall cooperate fully with the City or any agency investigating a possible violation on behalf of the City. If any violation is determined, the Offeror will properly compensate the City.
H. The Offeror agrees to incorporate the substance of this clause (after substituting "Contractor" for "Offeror") in all subcontracts under this offer.

_____
Initials for 2

3. COOPERATION WITH OTHER CONTRACTORS

Other City activities/contracts may be in progress or start during the performance of this contract. The Offeror shall coordinate the work harmoniously with the other contractors or City personnel, if applicable.

_____
Initials for 3

4. INTERNET USE

Should the Offeror require access to City Internet resources in the performance of this requirement, a "Contractor's Internet Use Agreement" form must be separately signed by each individual having access to

the City Network. The completed Contractor's Internet Use Agreement will be maintained with this agreement. Inappropriate use of the City Network will be grounds for immediate termination of any awarded contact.

_____
Initials for 4

5. LITIGATION

If awarded a contract, Offeror shall notify the City within five (5) calendar days after being served with a summons, complaint, or other pleading in any matter which has been filed in any federal or state court or administrative agency. The Offeror shall deliver copies of such document(s) to the City's Procurement Services Manager. The term "litigation" includes an assignment for the benefit of creditors, and filings of bankruptcy, reorganization and/or foreclosure.

_____

Initials for 5

6. CONTRACTOR'S REGISTRATION INFORMATION

Offeror's firm verifies and states that they are (check all that apply):

_____ Large Business (i.e. do not qualify as a small business or non-profit)

_____ Nonprofit

_____ Small Business

_____ Minority Owned Business/Small Disadvantaged Business

_____ Woman Owned Business

_____ Veteran Owned Business

_____ Service-Disabled Veteran Owned Business

_____ HUBZone Business

Note: The City accepts self-certification for these categories in accordance with Small Business Administration (SBA) standards. The SBA size standards are found on the SBA website https://www.sba.gov/content/am-i-small-business-concern.

_____
Initials for 6

7. CONTRACTOR PERSONNEL

A. The Offeror shall appoint one of its key personnel as the "Authorized Representative" who shall have the power and authority to interface with the City and represent the Offeror in all administrative matters concerning this Bid and any awarded contract, including without limitation such administrative matters as correction of problems modifications, and reduction of costs.
B. The Authorized Representative shall be the person identified in the Offeror's Bid, unless the Offeror provides written notice to the City naming another person to serve as its Authorized Representative. Communications received by the City Contracts Specialist from the Authorized Representative shall be deemed to have been received from the Offeror.

The individual, _____ (Name)
with position, _____ (Title)
Can be reached at
Work telephone number: _____
Home telephone number: _____
Cellular telephone number: _____
E-mail address: _____

_____
Initials for 7

8. OFFEROR'S CERTIFICATION

The undersigned hereby affirms that:

A. He/She is a duly authorized agent of the Offeror;
B. He/She has read and agrees to the City's standard terms and conditions attached.
C. The offer is presented in full compliance with the collusive prohibitions of the City of Colorado Springs. The Offeror certifies that no employee of its firm has discussed, or compared the offer with any other offeror or City employee and has not colluded with any other offeror or City employee.
D. The Offeror certifies that it has checked all of its figures, and understands that the City will not be responsible for any errors or omissions on the part of the Offeror in preparing its Bid.
E. By submitting an offer the Offeror certifies that it has complied and will comply with all requirements of local, state, and federal laws, and that no legal requirements have been or will be violated in making or accepting this solicitation.
F. If awarded the contract, the Offeror agrees to execute and enter into a contract with the City, and furnish the necessary security within ten (10) days of receipt of the "Notice of Award:, and to begin the work within ten (10) day from the date of the receipt of the "Notice to Proceed", and to complete the Work with the above specifications.
G. I hereby certify that I am submitting the Bid based on my company's capabilities to provide quality products and/or services on time.

_____
Initials for 8

9. OFFEROR CERTIFICATION REGARDING DEBARMENT, SUSPENSION, PROPOSED DEBARMENT, AND OTHER RESPONSIBILITY MATTERS:

A. The Offeror certifies to the best of its knowledge and belief, that (i) the Offeror and/or any of its Principals
   1. Are ( ), Are not ( ) presently debarred, suspended, proposed for debarment, or declared ineligible for the award of contracts by any Federal agency;
   2. Have ( ), Have not ( ), within a three year period preceding this offer, been convicted of or had a civil judgment rendered against them for: commission of fraud or a criminal offense in connection with obtaining, attempting to obtain, or performing a public (federal, state, local) contract or subcontract; violation of Federal or state antitrust statutes relation to the submission of offers; or commission of embezzlement, theft, forgery, bribery, falsification or destruction of records, making false statement, tax evasion, or receiving stolen property; and
   3. Are ( ), Are not ( ) presently indicated for, or otherwise criminally or civilly charged by a governmental entity with, commission of any of the offenses enumerated in any paragraphs above.
B. The Offeror shall provide immediate written notice to the City Contracts Specialist if, at any time prior to contract award, the Offeror learns that its certification was erroneous when submitted or has become erroneous by reasons of changed circumstances.
C. The certification in paragraph 1. above, is a material representation of fact upon which reliance was placed when making award. If it is later determined that the Offeror knowingly rendered an erroneous certification, in addition to other remedies available to the City, the City Contracts Specialist may

terminate the contract resulting from this solicitation for default. Termination for default may result in additional charges being levied for the costs incurred by the City to initiate activities to replace the awarded Contractor.

_____
Initials for 9

10. ACCEPTANCE OF CITY CONTRACTS SPECIALIST'S SOLE AUTHORITY FOR CHANGES
Unless otherwise specified in the Contract, the Offeror hereby agrees that any changes to the scope of work, subsequent to the original contract signing, shall be generated in writing and an approval signature shall be obtained from the City Contracts Specialist prior to additional work performance.

_____
Initials for 10

11. CITY CONTRACTOR SAFETY PROGRAM
The Offeror hereby agrees to adhere to a worker safety program for contractor employees on a City job site or location. By initialing below, the Offeror has reviewed the information and will abide by the City Policy which is available for review:

https://coloradosprings.gov/finance/page/procurement-regulations-and-documents

_____
Initials for 11

12. ACCEPTANCE OF CITY ENVIRONMENTALLY PREFERRED PURCHASING (EPP) POLICY
The City of Colorado Springs is committed to buying more environmentally preferable goods and services, as long as they meet performance needs, are available within a reasonable time and at a reasonable cost. The Offeror hereby acknowledges review of this policy by initialing below.

https://coloradosprings.gov/finance/page/procurement-regulations-and-documents

_____
Initials for 12

13. FRAUD, WASTE, AND ABUSE
Everyone has a duty to report any suspected unlawful act impacting the City of Colorado Springs operations and its enterprises. Anyone who becomes aware of the existence or apparent existence of fraud, waste, and abuse in City of Colorado Springs is encouraged to report such matters to the City Auditor's Office in writing or on the telephone hotline 385-2387 (ADTR). Written correspondence can be mailed to:

City Auditor
P.O. Box 2241
Colorado Springs CO 80901

Or via email FraudHotline@coloradosprings.gov. Any of these mechanisms allow for anonymous reporting. For more information, please go to the website https://coloradosprings.gov/cityfraud.

_____
Initials for 14

Name of Company: _____

Federal Tax ID Number:_____

DUNS Number: _____

Principal Place of Business: _____

_____
Signature of Authorized Representative

Printed Name:_____

Title:_____

Date:_____

EXHIBIT 2 SAMPLE CONTRACT
CONSTRUCTION CONTRACT

Contract Number:		Project Name/Title	
Vendor/Contractor			
Contact Name:		Telephone:	
Email Address:			
Address:			
Federal Tax ID #		Please check one:	☐ Corporation ☐ Individual ☐ Partnership
City Contracting Specialist		City Dept Rep	
NOT TO EXCEED Contract Amount:		City Account #	
Contract Type:	Fixed Unit Price	Period of Performance:	

1. INTRODUCTION

THIS *Fixed Unit Price* CONTRACT ("Contract") is made and entered into this XXX day of XXX, 2022 by and between the City of Colorado Springs, a Colorado municipal corporation and home rule city, in the County of El Paso, State of Colorado, (the "City"), and _____ (the "Contractor").

THE CITY AND THE CONTRACTOR HEREBY AGREE AS FOLLOWS:

The City has heretofore prepared the necessary Contract Documents for the following Activity: XXXX.

The Contractor did on the XXX day of XXX, 2022 submit to the City the Contractor's written offer and proposal to do the work therein described under the terms and conditions therein set forth and furnish all materials, supplies, labor, services, transportation, tools, equipment, and parts for said work in strict conformity with the accompanying Contract Documents, which are attached hereto and incorporated herein by this reference, including the following:

1. This Contract
2. Schedule A – Price Sheet
3. Schedule B – General Construction Terms and Conditions
4. Schedule C – Special Contract Terms and Conditions
5. Schedule D – General Specifications
6. Schedule E – Special and Technical Specifications
7. Schedule F – Scope of Work
8. Exhibit 1 – Performance, Labor and Material Payment, and Maintenance Bonds
9. Exhibit 2 – Minimum Insurance Requirements

2. COMPENSATION/CONSIDERATION

THIS FIXED UNIT PRICE CONTRACT is established at the Not to Exceed amount of $xxxxxxxx.

Subject to the terms and conditions of the Contract Documents, Contractor agrees to furnish all materials and to perform all work as set forth in its proposal and as required by the Contract Documents.

All pricing is in accordance with the fixed unit prices found in Schedule A, as proposed by the Contractor. Payment made for actual quantities as set forth in Schedule B, General Construction Terms and Conditions. At no time shall the total obligation of the City exceed the not to exceed amount of this Contract.

3. TERM OF CONTRACT

Contractor will start work promptly after the Notice to Proceed and continue to work diligently until completed. The Contractor shall complete all work on an as ordered basis throughout the Contract period which is **the date of Notice to Proceed through April 30, 2022** ("Period of Performance") as per the specifications and drawings. The Contractor shall provide a two-year guarantee on all work performed under this Contract after the job has been completed and accepted.

4. INSURANCE

The Contractor shall provide and maintain acceptable Insurance Policy(s) consistent with the Minimum Insurance Requirements attached as Exhibit 2, which includes Property, Liability, and as otherwise listed in Exhibit 2. The City of Colorado Springs shall be reflected as an additional insured on the Property and Liability policy(s).

Further, Contractor understands and agrees that Contractor shall have no right of coverage under any existing or future City comprehensive, self, or personal injury policies. Contractor shall provide insurance coverage for and on behalf of Contract that will sufficiently protect Contractor, or Contractor's agents, employees, servants or other personnel, in connection with the services which are to be provided by Contractor pursuant to this Contract, including protection from claims for bodily injury, death, property damage, and lost income. Contractor shall provide worker's compensation insurance coverage for Contractor and all Contractor personnel. Contractor shall file applicable insurance certificates with the City and shall also provide additional insurance as indicated in this Contract. ***A CURRENT CERTIFICATE OF INSURANCE IS REQUIRED PRIOR TO COMMENCEMENT OF SERVICES LISTING THE CITY AS ADDITIONALLY INSURED.***

5. RESPONSIBILITY OF THE CONTRACTOR

A. The Contractor shall be responsible for the professional quality, technical accuracy, and the coordination of all Scope of Work services furnished by the Contractor under this Contract. The Contractor shall, without additional compensation, correct or revise any errors or deficiencies in services provided under this Contract to the satisfaction of the City.

B. The City's review, approval of, acceptance of, or payment for the services required under this Contract shall not be construed to operate as a waiver of any rights under this Contract or of any cause of action arising out of the performance of this Contract, and the Contractor shall

be and remain liable to the City for any and all damages to the City caused by the Contractor's negligent performance of any of the services furnished under this Contract.

C. The rights and remedies of the City provided for under this Contract are in addition to any other rights and remedies provided by law.

D. If the Contractor is comprised of more than one legal entity, each such entity shall be jointly and severally liable hereunder.

6. WORK OVERSIGHT

A. The extent and character of the work to be done by the Contractor shall be subject to the general approval of the City's delegated Project Manager.

B. If any of the work or services being performed does not conform with Contract requirements, the City may require the Contractor to perform the work or services again in conformity with Contract requirements, at no increase in Contract amount. When defects in work or services cannot be corrected by re-performance, the City may (1) require the Contractor to take necessary action to ensure that future performance conforms to Contract requirements and (2) reduce the Contract price to reflect the reduced value of the work or services performed.

C. If the Contractor fails to promptly perform the defective work or services again or to take the necessary action to ensure future performance is in conformity with Contract requirements, the City may (1) by Contract or otherwise, perform the services and charge to the Contractor any cost incurred by the City that is directly related to the performance of such work or service or (2) terminate the Contract for breach of contract.

7. SUBCONTRACTORS, ASSOCIATES, AND OTHER CONTRACTORS

A. Any subcontractor, outside associates, or other contractors used by the Contractor in connection with Contractor's work under this Contract shall be limited to individuals or firms that are specifically identified by the Contractor in the Contractor's proposal and agreed to by the City. The Contractor shall obtain the City's Project Manager's written consent before making any substitution of these subcontractors, associates, or other contractors.

B. The Contractor shall include a flow down clause in all of its subcontracts, agreements with outside associates, and agreements with other contractors. The flow down clause shall cause all of the terms and conditions of this Contract, including all of the applicable parts of the Contract Documents, to be incorporated into all subcontracts, agreements with outside associates, and agreements with other contractors. The flow down clause shall provide clearly that there is no privity of contract between the City and the Contractor's subcontractors, outside associates, and other contractors.

8. KEY PERSONNEL

The key personnel listed in the proposal and/or below will be the individuals used in the performance of the work. If any of the listed key personnel leave employment or are otherwise not utilized in the performance of the work, approval to substitute must be obtained by the

Contractor from the City's Project Manager. Any substitute shall have the same or a higher standard of qualifications that the key personnel possessed at the time of Contract award.

9. START AND CONTINUANCE OF WORK

It is further agreed that the Contractor will start work promptly and continue to work diligently until this Contract is completed.

10. APPROPRIATION OF FUNDS

This Contract is expressly made subject to the limitations of the Colorado Constitution and Section 7-60 of the Charter of the City of Colorado Springs. Nothing herein shall constitute, nor be deemed to constitute, the creation of a debt or multi-year fiscal obligation or an obligation of future appropriations by the City Council of Colorado Springs, contrary to Article X, § 20, Colo. Const., or any other constitutional, statutory, or charter debt limitation. Notwithstanding any other provision of this Contract, with respect to any financial obligation of the City which may arise under this Agreement in any fiscal year after the year of execution, in the event the budget or other means of appropriation for any such year fails to provide funds in sufficient amounts to discharge such obligation, such failure (i) shall act to terminate this Contract at such time as the then-existing and available appropriations are depleted, and (ii) neither such failure nor termination shall constitute a default or breach of this Contract, including any sub-agreement, attachment, schedule, or exhibit thereto, by the City. As used herein, the term "appropriation" shall mean and include the due adoption of an appropriation ordinance and budget and the approval of a Budget Detail Report (Resource Allocations) which contains an allocation of sufficient funds for the performance of fiscal obligations arising under this Contract.

11. CHANGES

The Contractor and the City agree and acknowledge as a part of this Contract that no change order or other form or order or directive may be issued by the City which requires additional compensable work to be performed, which work causes the aggregate amount payable under the Contract to exceed the amount appropriated for this Contract as listed above, unless the Contractor has been given a written assurance by the City that lawful appropriations to cover the costs of the additional work have been made or unless such work is covered under a remedy-granting provision of this Contract. The Contractor and the City further agree and acknowledge as a part of this Contract that no change order or other form or order or directive which requires additional compensable work to be performed under this Contract shall be issued by the City unless funds are available to pay such additional costs, and, regardless of any remedy-granting provision included within this Contract, the Contractor shall not be entitled to any additional compensation for any change which increases or decreases the Contract completion date, or for any additional compensable work performed under this Contract, and expressly waives any rights to additional compensation, whether by law or equity, unless, prior to commencing the additional work, the Contractor is given a written change order describing the change in Contract completion date or the additional compensable work to be performed, and setting forth the amount of compensation to be paid, and such change order is signed by the authorized City representative, as defined below. The amount of compensation to be paid, if any, shall be deemed to cover any and all additional, direct, indirect or other cost or expense or profit of the Contractor whatsoever. It is the Contractor's sole responsibility to know, determine, and ascertain the authority of the City representative signing any change order under this Contract.

No change, amendment, or modification to this Contract shall be valid unless duly approved and issued in writing by the City of Colorado Springs Procurement Services Division. The City shall not be liable for any costs incurred by the Contractor resulting from work performed for changes not issued in writing by the City of Colorado Springs Procurement Services Division.

The following personnel are authorized to sign changes, amendments, or modifications to this Contract.

The Project Manager: Changes up to $14,999.99
The City of Colorado Springs Chief of Staff: Changes up to $499,999.99
The Mayor of the City of Colorado Springs: Unlimited

12. ECONOMIC PRICE ADJUSTMENT

A. The Contractor shall notify the City of Colorado Springs Procurement Services Division if, at any time during contract performance, the rate of pay for labor or the unit prices for material shown in Schedule A experiences a significant increase. A change in price shall be considered significant when the unit price of an item increases by 10% from the execution date of this Contract. The Contractor shall furnish notice of this increase within 60 days after the increase, or within any additional period that the City Procurement Services Division may approve in writing, but not later than the date of final payment under this Contract. The notice shall include the Contractor's proposal for an adjustment in the Contract unit prices to be negotiated under paragraph (b) of this clause, and shall include, in the form required by the City Procurement Services Division, supporting data explaining the cause, effective date, and amount of the increase and the amount of the Contractor's adjustment proposal.

B. Promptly after the City Procurement Services Division receives the notice and data under paragraph (a) of this clause, the City Procurement Services Division and the Contractor shall negotiate a price adjustment in the contract unit prices and its effective date. However, the City Procurement Services Division may postpone the negotiations until an accumulation of increases in the labor rates (including fringe benefits) and unit prices of material shown in Schedule A results in an adjustment allowable under paragraph (c)(3) of this clause. The City Procurement Services Division shall modify this contract (1) to include the price adjustment and its effective date and (2) to revise the labor rates (including fringe benefits) or unit prices of material as shown in Schedule A to reflect the increases resulting from the adjustment. The Contractor shall continue performance at current rates pending agreement on, or determination of, any adjustment and its effective date.

C. Any price adjustment under this clause is subject to the following limitations:
   1. Any adjustment shall be limited to the effect on unit prices of the increases in the rates of pay for labor (including fringe benefits) or unit prices for material shown in Schedule A. There shall be no adjustment for:
      (i) Supplies or services for which the production cost is not affected by such changes;
      (ii) Changes in rates or unit prices other than those shown in Schedule A; or
      (iii) Changes in the quantities of labor or material used from those shown in Schedule A for each item.
   2. No upward adjustment shall apply to supplies or services that are required to be delivered or performed before the effective date of the adjustment, unless the Contractor's failure to

deliver or perform according to the delivery schedule results from causes beyond the Contractor's control and without its fault or negligence, within the meaning of the Default clause.

3. There shall be no adjustment for any change in rates of pay for labor (including fringe benefits) or unit prices for material which would not result in a net change of at least 3 percent of the then-current total contract price. This limitation shall not apply, however, if, after final delivery of all line items, either party requests an adjustment under paragraph (b) of this clause.
4. The aggregate of the increases in any contract unit price made under this clause shall not exceed 10 percent of the original unit price.

13. ASSIGNMENT

No assignment or transfer by the Contractor of this Contract or any part thereof or of the funds to be received thereunder by the Contractor will be recognized unless such assignment has had the prior written approval of the City and the surety has been given due notice of such assignment. Such written approval by the City shall not relieve the Contractor of the obligations under the terms of this Contract. In addition to the usual recitals in assignment contracts, the following language must be included in the assignment:

It is agreed that the funds to be paid to the assignee under this assignment are subject to a prior lien for services rendered or materials supplied for the performance of the work called for in said contract in favor of all persons, firms, or corporations rendering such services or supplying such materials.

14. CHOICE OF LAW

This Contract is subject to and shall be interpreted under the law of the State of Colorado, and the Charter, City Code, Ordinances, Rules and Regulations of the City of Colorado Springs, Colorado, a Colorado home rule city. Court venue and jurisdiction shall be exclusively in the Colorado District Court for El Paso County, Colorado. The Parties agree that the place of performance for this Contract is deemed to be in the City of Colorado Springs, El Paso County, State of Colorado. The Contractor shall ensure that the Contractor and the Contractor's employees, agents, officers and subcontractors are familiar with, and comply with, applicable Federal, State, and Local laws and regulations as now written or hereafter amended.

15. WORKERS' COMPENSATION INSURANCE

Contractor shall take out and maintain during the Period of Performance, Colorado Worker's Compensation Insurance for the Contractor and all employees of the Contractor. If any service is sublet by the Contractor, the Contractor shall require the subcontractor to provide the same coverage for the subcontractor and subcontractor's employees. Workers' Compensation Insurance shall include occupational disease provisions covering any obligations of the Contractor in accord with the provisions of the Workers' Compensation Act of Colorado.

16. INDEMNIFICATION

Contractor agrees that the Contractor shall indemnify, defend and hold harmless the City, its officers, employees and agents, from and against any and all loss, damage, injuries, claims,

cause or causes of action, or any liability whatsoever resulting from, or arising out of, or in connection with the Contractor's obligations or actions under this Contract caused by any willful or negligent error, omission or act or a failure to observe any applicable standard of care by the Contractor or any person employed by it or anyone for whose acts the Contractor is legally liable. In consideration of the award of this Contract, to the extent damages are covered by insurance, the Contractor agrees to waive all rights of subrogation against the City, its subsidiary, parent, associated and/or affiliated entities, successors, or assigns, its elected officials, trustees, employees, agents, and volunteers for losses arising from the work performed by the Contractor for the City. The indemnification obligation shall survive the expiration or termination of this Contract

17. INDEPENDENT CONTRACTOR

In the performance of the Contractor's obligations under this Contract, it is understood, acknowledged and agreed between the parties that the Contractor is at all times acting and performing as an independent contractor, and the City shall neither have nor exercise any control or direction over the manner and means by which the Contractor performs the Contractor's obligations under this Contract, except as otherwise stated within the Contract terms. The City shall not provide any direction to the Contractor on the work necessary to complete the project. Contractor understands that it is an independent contractor responsible for knowing how to perform all work or tasks necessary to complete project. The Contractor understands and agrees that the Contractor and the Contractor's employees, agents, servants, or other personnel are not City employees. The Contractor shall be solely responsible for payment of salaries, wages, payroll taxes, unemployment benefits or any other form of compensation or benefit to the Contractor or any of the Contractor's employees, agents, servants or other personnel performing services or work under this Contract, whether it is of a direct or indirect nature. Further in that regard, it is expressly understood and agreed that for such purposes neither the Contractor nor the Contractor's employees, agents, servants or other personnel shall be entitled to any City payroll, insurance, unemployment, worker's compensation, retirement or any other benefits whatsoever.

18. APPLICABLE LAW AND LICENSES

In the conduct of the services or work contemplated in this Contract, the Contractor shall ensure that the Contractor and all subcontractors comply with all applicable state, federal and City and local law, rules and regulations, technical standards or specifications. The Contractor shall qualify for and obtain any required licenses prior to commencement of work.

19. PRIOR AGREEMENTS

This is a completely integrated Contract and contains the entire agreement between the parties. Any prior written or oral agreements or representations regarding this Contract shall be of no effect and shall not be binding on the City. This Contract may only be amended in writing, and executed by duly authorized representatives of the parties hereto.

20. INTELLECTUAL PROPERTY

The Parties hereby agree, and acknowledge, that all products, items writings, designs, models, examples, or other work product of the Contractor produced pursuant to this Contract are works made for hire, and that the City owns, has, and possesses any and all ownership rights and

interests to any work products of the Contractor made under this Contract, including any and all copyright, trademark, or patent rights, and that compensation to the Contractor for Agreement and acknowledgment of this intellectual property right section of this Contract is included in any compensation or price whatsoever paid to the Contractor under this Contract. It is the intent of the parties that the City shall have full ownership and control of the Contractor's work products produced pursuant to this Contract, and the Contractor specifically waives and assigns to the City all rights which Contractor may have under the 1990 Visual Artists Rights Act, federal, and state law, as now written or later amended or provided. In the event any products, items writings, designs, models, examples, or other work product produced pursuant to this Contract is deemed by a court of competent jurisdiction not to be a work for hire under federal copyright laws, this intellectual property rights provision shall act as an irrevocable assignment to the City by the Contractor of any and all copyrights, trademark rights, or patent rights in the Contractor's products, items writings, designs, models, examples, or other work product produced pursuant to this Contract, including all rights in perpetuity. Under this irrevocable assignment, the Contractor hereby assigns to the City the sole and exclusive right, title, and interest in and to the Contractor's products, items writings, designs, models, examples, or other work product produced pursuant to this Contract, without further consideration, and agrees to assist the City in registering and from time to time enforcing all copyrights and other rights and protections relating to the Contractor's products, items writings, designs, models, examples, or other work product in any and all countries. It is the Contractor's specific intent to assign all right, title, and interest whatsoever in any and all copyright rights in the Contractor's products, items writings, designs, models, examples, or other work product produced pursuant to this Contract, in any media and for any purpose, including all rights of renewal and extension, to the City. To that end, the Contractor agrees to execute and deliver all necessary documents requested by the City in connection therewith and appoints the City as Contractor's agent and attorney-in-fact to act for and in Contractor's behalf and stead to execute, register, and file any such applications, and to do all other lawfully permitted acts to further the registration, prosecution, issuance, renewals, and extensions of copyrights or other protections with the same legal force and effect as if executed by the Contractor; further, the parties expressly agree that the provisions of this intellectual property rights section shall be binding upon the parties and their heirs, legal representatives, successors, and assigns.

21. WAIVERS

No waiver of default by the City of any of the terms, covenants, and conditions hereof to be performed, kept, and observed by the Contractor shall be construed, or shall operate, as a waiver of any subsequent default of any of the terms, covenants, or conditions herein contained to be performed, kept, and observed by the Contractor.

22. THIRD PARTIES

It is expressly understood and agreed that enforcement of the terms and conditions of this Contract, and all rights of action relating to such enforcement, shall be strictly reserved to the Parties hereto, and nothing contained in this Contract shall give or allow any such claim or right of action by any other or third person or entity on such Contract. It is the express intention of the Parties hereto that any person or entity, other than the Parties to this Contract, receiving services or benefits under this Contract shall be deemed to be incidental beneficiaries only.

23. TERMINATION

A. Termination for Convenience.

By signing this Contract, Contractor represents that it is a sophisticated business and enters into the Contract voluntarily, has calculated all business risks associated with this Contract, and understands and assumes all risks of being terminated for convenience, whether such risks are known or not known. Contractor agrees that the City may terminate this Contract at any time for convenience of the City, upon written notice to the Contractor. Contractor expressly agrees to and assumes the risk that the City shall not be liable for any costs or fees of whatsoever kind and nature if termination for convenience occurs before Contractor begins any work or portion of the work. Contractor further expressly agrees and assumes the risks that the City shall not be liable for any unperformed work, anticipated profits, overhead, mobilizations costs, set-up, demobilization costs, relocation costs of employees, layoffs or severance costs, administrative costs, productivity costs, losses on disposal of equipment or materials, cost associated with the termination of subcontractors, costs associated with purchase orders or purchases, or any other costs or fees of any kind and nature, if Contractor has started or performed portions of the Contract prior to receiving notice from the City. The City shall be liable only for the portions of work Contractor actually satisfactorily completed up to the point of the issuance of the Notice of Termination for convenience. Upon receipt of this notice the Contractor shall immediately: discontinue all services affected (unless the notice directs otherwise), and deliver to the City all data, drawings, specifications, reports, estimates, summaries, and other information and materials accumulated in performing this Contract, whether completed or in process.

B. Termination for Cause: The occurrence of any one or more of the following events ("Event of Default") will justify termination for cause:

1. Contractor's failure to perform the work in accordance with the Contract Documents (including, but not limited to, failure to supply sufficient skilled workers or suitable materials or equipment or failure to adhere to the progress schedule as adjusted from time to time.
2. Contractor's disregard of the laws or regulations of any public body having jurisdiction.
3. Contractor's disregard of the authority of Project Manager.
4. Contractor's violation in any material provision of the Contract Documents.
5. Contractor's failure to make prompt payments to its subcontractors, and suppliers of any tier, or laborers or any person working on the work by, through, or under the Contractor or any of them, any all of their employees, officers, servants, members, and agents.
6. Contractor files a petition commencing a voluntary case under the U.S. Bankruptcy Code, or for liquidation, reorganization, or an arrangement pursuant to any other U.S. or state bankruptcy Laws, or shall be adjudicated a debtor or be declared bankrupt or insolvent under the U.S. Bankruptcy Code, or any other federal or state laws relating to bankruptcy, insolvency, winding-up, or adjustment of debts, or makes a general assignment for the benefit of creditors, or admits in writing its inability to pay its debts generally as they become due, or if a petition commencing an involuntary case under the U.S. Bankruptcy Code or an answer proposing the adjudication of Contractor as a debtor or bankrupt or proposing its liquidation or reorganization pursuant to the Bankruptcy Code or any other U.S. federal or state bankruptcy laws is filed in any court and Contractor consents to or acquiesces in the filing of that pleading or the petition or answer is not discharged or denied within sixty (60) Calendar Days after it is filed.
7. A custodian, receiver, trustee or liquidator of Contractor, all or substantially all of the assets or business of Contractor, or of Contractor's interest in the Work or the Contract, is

appointed in any proceeding brought against Contractor and not discharged within sixty (60) Calendar Days after that appointment, or if Contractor shall consent to or acquiesces in that appointment.

8. Contractor fails to commence correction of defective work or fails to correct defective work within a reasonable period of time after written notice.

If one or more of the events identified in Paragraphs 1-8 above occur, City may give Contractor written notice of the event and direct the event be cured. Any such Notice to Cure will provide Contractor a minimum of ten (10) calendar days to prepare and submit to the Project Manager a plan to correct the Event of Default. If such plan to correct the Event of Default is not submitted to the Project Manager within ten (10) days after the date of the written notice or such plan is unacceptable to the City, the City may, give Contractor (and the Surety, if any) written notice that Contractor's services are being terminated for cause. Upon delivery of the termination notice, City may terminate the services of Contractor in whole or in part, exclude Contractor from the site, and take possession of the work and of all Contractor's tools, appliances, construction equipment, and machinery at the project site, and use the same to the full extent they could be used by Contractor (without liability to Contractor for trespass or conversion), incorporate in the work all materials and equipment stored at the site or for which City has paid Contractor but which are stored elsewhere, and finish the work as City may deem expedient. In such case, Contractor shall not be entitled to receive any further payment until Certificate of Completion of the work. In the event City terminates this Contract for Cause and the cost of completing the work exceeds the unpaid balance of the Contract price, Contractor shall pay City for any costs of completion which exceed the Contract price when combined with all amounts previously paid to Contractor. When exercising any rights or remedies under this paragraph City shall not be required to obtain the lowest price for the work performed. Should the cost of such completion, including all proper charges, be less than the original Contract price, the amount so saved shall accrue to the City. Neither the City nor any officer, agent or employee of the City shall be in any way liable or accountable to the Contractor or the Surety for the method by which the completion of the said work, or any portion thereof, may be accomplished or for the price paid.

Where Contractor's services have been so terminated by City, the termination will not affect any rights or remedies of City against Contractor or Surety then existing or which may thereafter accrue. Any retention or payment of moneys due Contractor by City will not release Contractor from liability.

C. Termination Notice. Upon receipt of a termination notice, whether for convenience or cause, the Contractor shall immediately: discontinue all services affected (unless the notice directs otherwise), and deliver to the City all data, drawings, specifications, reports, estimates, summaries, and other information and materials accumulated in performing this Contract, whether completed or in process.

D. Removal of Equipment. Except as provided above, in the case of termination of this Contract before completion from any cause whatever, the Contractor, if notified to do so by the City, shall promptly remove any part or all of Contractor's equipment and supplies from the property of the City, failing which the City shall have the right to remove such equipment and supplies at the expense of the Contractor.

24. BOOKS OF ACCOUNT AND AUDITING

The Contractor shall make available to the City if requested, true and complete records, which support billing statements, reports, performance indices, and all other related documentation. The City's authorized representatives shall have access during reasonable hours to all records, which are deemed appropriate to auditing billing statements, reports, performance indices, and all other related documentation. The Contractor agrees that it will keep and preserve for at least seven years all documents related to the Contract which are routinely prepared, collected or compiled by the Contractor during the performance of this Contract.

The City's Auditor and the Auditor's authorized representatives shall have the right at any time to audit all of the related documentation. The Contractor shall make all documentation available for examination at the Auditor's request at either the Auditor's or Contractor's offices, and without expense to the City.

25. COMPLIANCE WITH IMMIGRATION REFORM AND CONTROL ACT OF 1986

Contractor certifies that Contractor has complied with the United States Immigration Reform and Control Act of 1986. All persons employed by Contractor for performance of this Contract have completed and signed Form I-9 verifying their identities and authorization for employment.

26. LABOR

The Contractor shall employ only competent and skilled workmen and foremen in the conduct of work on this Contract. The Contractor shall at all times enforce strict discipline and good order among Contractor's employees. The Project Manager shall have the authority to order the removal from the work of any person, including Contractor's or any subcontractor's employees, who refuses or neglects to observe any of the provisions of these Plans or Specifications, or who is incompetent, abusive, threatening, or disorderly in conduct and any such person shall not again be employed on the Project.

In accord with the Keep Jobs in Colorado Act, codified at sections 8-17-101, et seq., C.R.S., Colorado labor shall be employed to perform the work to the extent of not less than eighty percent (80%) of each type or class of labor in the several classifications of skilled and common labor employed on this Project et seq.=; provided however, that this paragraph shall not apply if the Project receives federal funding.

In no event shall the City be responsible for overtime pay.

27. GRATUITIES

A. This Contract may be terminated if the Mayor, the Mayor's designee, and/or the Procurement Services Manager determine, in their sole discretion, that the Contractor or any officer, employee, agent, or other representative whatsoever, of the Contractor offered or gave a gift or hospitality to a City officer, employee, agent or Contractor for the purpose of influencing any decision to grant a City contract or to obtain favorable treatment under any City contract.

B. The terms "hospitality" and "gift" include, but are not limited to, any payment, subscription, advance, forbearance, acceptance, rendering or deposit of money, services, or anything of

value given or offered, including but not limited to food, lodging, transportation, recreation or entertainment, token or award.

C. Contract termination under this provision shall constitute a breach of contract by the Contractor, and the Contractor shall be liable to the City for all costs of reletting the contract or completion of the project. Further, if the Contractor is terminated under this provision, or violates this provision but is not terminated, the Contractor shall be subject to debarment under the City's Procurement Regulations. The rights and remedies of the City provided in this clause shall not be exclusive and are in addition to any other rights and remedies provided by law or under this Contract.

28. NON-DISCRIMINATION

A. In accord with section 24-34-402, C.R.S., Title VII of the Civil Rights Act of 1964, Americans with Disabilities Act of 1990 as amended, all applicable federal and state laws, the Contractor will not discriminate against any employee or applicant for employment because of disability, race, creed, color, sex, sexual orientation, gender identity, gender expression, religion, age, national origin, or ancestry.

B. The Contractor agrees to post in conspicuous places, available to employees and applicants for employment, notices to be provided setting forth the provisions of this nondiscrimination clause.

C. The Contractor will, in all solicitations or advertisements for employees placed by or on behalf of the Contractor, state that all qualified applicants will receive consideration for employment without regard to disability, race, creed, color, sex, sexual orientation, gender identity, gender expression, religion, age, national origin, or ancestry.

29. ORDER OF PRECEDENCE

Any inconsistency in this Contract shall be resolved by giving precedence in the following order:

A. This Contract document with its terms and conditions
B. Specific Construction Terms and Conditions
C. General Construction Terms and Conditions
D. The Statement of Work
E. Specific Specifications
F. General Specifications
G. Other Appendices, Attachments, Exhibits, or Schedules

30. HEADINGS

The section headings contained in this Contract are for reference purposes only and shall not affect the meaning or interpretation of this Contract.

31. DISPUTES

A. All administrative and contractual disputes arising from or related to this Contract other than those arising under Unanticipated Circumstances provisions (in section107.27 of Schedule B

General Construction Terms and Conditions) shall be addressed in the following manner:

1. If either Party disputes or disagrees with a Contract term or the other Party's interpretation of a Contract term or has any other administrative or contractual dispute not addressed in the Unanticipated Circumstances provisions, such Party shall promptly give the other Party written notice of said dispute.
2. The Parties shall hold a meeting as soon as reasonably possible, but in no event later than thirty (30) calendar days from the initial written notice of the dispute, attended by persons with decision-making authority regarding the dispute, to attempt in good faith to negotiate a resolution of the dispute; provided, however, that no such meeting shall be deemed to vitiate or reduce the obligations and liabilities of the Parties or be deemed a waiver by a Party of any remedies to which such Party would otherwise be entitled unless otherwise agreed to by the Parties in writing.
3. If, within thirty (30) calendar days after such meeting, the Parties have not succeeded in negotiating a resolution of the dispute, they agree to submit the dispute to non-binding mediation and to bear equally the costs of the mediation.
4. The Parties will jointly appoint a mutually acceptable mediator. If they fail to do so within twenty (20) calendar days from the conclusion of the negotiation period, they shall each select a mediator. The two mediators will then appoint a third mediator who shall conduct mediation for the Parties as the sole mediator.
5. The Parties agree to participate in good faith in the mediation and negotiations for a period of thirty (30) calendar days. The substantive and procedural law of the State of Colorado shall apply to the proceedings. If the Parties are not successful in resolving the dispute through mediation, then the Parties shall be free to pursue any other remedy afforded by the laws of the State of Colorado.
6. Until final resolution of any dispute hereunder, the Contractor shall diligently proceed with the performance of this Contract as directed by the City. For purposes of this Contract, termination for convenience shall not be deemed a dispute. The City of Colorado Springs and the Contractor agree to notify each other in a timely manner of any claim, dispute, or cause of action arising from or related to this Contract, and to negotiate in good faith to resolve any such claim, dispute, or cause of action. To the extent that such negotiations fail, the City of Colorado Springs and the Contractor agree that any lawsuit or cause of action that arises from or is related to this Contract shall be filed with and litigated only by the Colorado District Court for El Paso County, CO.

32. DELIVERY

The City may cancel this Contract or any portion thereof if delivery is not made when and as specified, time being of the essence in this Contract. Contractor shall pay the City for any loss or damage sustained by the City because of failure to perform in accordance with this Contract.

33. PAYMENTS

All invoices shall be sent to the Project Manager identified in this Contract.

The City will pay the Contractor, upon submission of proper invoices, the prices stipulated in the Contract for services rendered and accepted, less any deductions provided in this Contract within 30 days (Net 30). The City will not pay late fees or interest. Any discount payment terms offered on the invoice may be taken by the City.

All payments for Construction will be made in accordance with the Payment provisions found in Schedule B – General Construction Terms and Conditions.

Each invoice must contain at least the following information:

Contract number, issued purchase order number, invoice number, invoice date, timeframe covered by invoice, type and amount of labor and materials used for that time period, dollar amount in unit price, extended price, and total value of invoice.

34. INSPECTION OF SERVICES

The Contractor is responsible for performing or having performed all inspections and tests necessary to substantiate that the services furnished under this Contract conform to Contract requirements, including any applicable technical requirements for specified manufacturers' parts. This clause takes precedence over any City inspection and testing required in the Contract's specifications, except for specialized inspections or tests specified to be performed solely by the City.

A. Definition of "services", as used in this clause, includes services performed, workmanship, and material furnished or utilized in the performance of services.

B. The Contractor shall provide and maintain an inspection system acceptable to the City covering the services under this Contract. Complete records of all inspection work performed by the Contractor shall be maintained and made available to the City during Contract performance and for as long afterwards as the Contract requires.

C. The City has the right to inspect and test all services called for by the Contract, to the extent practicable at all times and places during the term of the Contract. The City will perform inspections and tests in a manner that will not unduly delay the work.

D. If the City performs inspections or test on the premises of the Contractor or a subcontractor, the Contractor shall furnish, and shall require subcontractors to furnish, at no increase in Contract price, all reasonable facilities and assistance for the safe and convenient performance of these duties.

35. SECURITY

The City maintains security requirements regarding access to City buildings and other City workplaces and worksites on City property. All Contractor personnel accessing City buildings, workplaces, or worksites, may be required to produce a valid, Government issued picture identification. Contractor personnel lacking such identification may not be allowed access to such sites. No costs incurred by the Contractor due to City security requirements shall be allowable or payable under this Contract.

36. TIME IS OF THE ESSENCE

In as much as the Contract concerns a needed or required service, the terms, conditions, and provisions of the Contract relating to the time of performance and completion of work are of the essence of this Contract. The Contractor shall begin work on the day specified and shall prosecute

the work diligently so as to assure completion of the work within the number of calendar days or date specified, or the date to which the time for completion may have been extended.

37. EMPLOYMENT OF LABOR

The Contractor shall comply with, and defend and hold the City harmless from any violation of all laws and lawful rules and regulations, both of the State of Colorado and of the United States, relating to Workmen's Compensation, unemployment compensation, Social Security, payment for overtime, and all other expenses and conditions of employment under this Contract.

38. SALES TAX

The Contractor must have a tax-exemption certificate from the Colorado Department of Revenue for this project. The certificate does not apply to City of Colorado Springs Sales and Use Tax which shall be applicable. The tax exempt project number and the exemption certificate only applies to County, PPRTA (Pikes Peak Rural Transportation Authority), and State taxes when purchasing construction and building materials **to be incorporated into this project**.

Furthermore, the exemption **does not** include or apply to the purchase or rental of equipment, supplies or materials that **do not become a part of the completed project or structure**. Such purchases and rentals are subject to full applicable taxation.

All contracts with subcontractors must include the City of Colorado Springs Sales and Use Tax on the work covered by the Contract, and other taxes as applicable.

Note: For all equipment, materials and supplies incorporated into the work purchased from vendors or suppliers not licensed to collect City Sales Tax (i.e. out of state suppliers, etc.), City Use Tax is due and payable to the City. The Contractor shall execute and deliver and shall cause the Contractor's subcontractors to execute and deliver to the City Sales Tax Office, the appropriate ST forms as designated by the City Sales Tax Office. These forms shall list all said equipment, materials and supplies and the corresponding use tax due, along with payment for said taxes. Any outstanding taxes due may be withheld from the final payment due the Contractor and may result in suspension of Contractor from bidding on City projects.

Forms and instructions can be downloaded at https://coloradosprings.gov/cat/government/tax-information/sales-tax. Questions can be directed to the City Sales Tax Division at (719) 385-5903.

Our Registration Numbers are as follows:
City of Colorado Springs
Federal I.D.: 84-6000573
Federal Excise: A-138557
State Sales Tax: 98-03479

The Contractor's payment or exemption of State of Colorado, El Paso County and City Sales and Use Taxes shall be as specified herein.

39. SEVERABILITY

If any terms, conditions, or provisions of this Contract shall be held unconstitutional, illegal, or void, such finding shall not affect any other terms, conditions, or provisions of this Contract.

40. LIABILITY OF CITY EMPLOYEES

All authorized representatives of the City are acting solely as agents and representatives of the City when carrying out and exercising the power or authority granted to them under the Contract. There shall not be any liability on them either personally or as employees of the City.

41. USE OF CITY NAME OR LOGO

Except as otherwise provided in this Contract, the Contractor shall not refer to this Contract or the City of Colorado Springs in any advertising or promotions in such a manner as to state or imply that the product or service provided is endorsed or preferred by the City of Colorado Springs, its employees, or its Departments, or is considered by these entities to be superior to other products or services. Any use of the name or logo of the City of Colorado Springs in advertising or promotions must be approved in writing by the City of Colorado Springs Contracts Specialist assigned to the Contract prior to such use.

42. TRAVEL

If travel expenses are included as a line item in this Contract, all travel expenses incurred and billable by the Contractor are subject to City approval. Air travel shall be limited to the round trip "economy coach" fare. Travel from the Colorado Springs Airport is encouraged. Unless there are extenuating circumstances, the Contract should take advantage of lower airfares by purchasing tickets more than 14 days in advance of travel. In-state travel by air must be more economical than travel by private vehicle. Use of a private vehicle may be reimbursed per mile at the current rate published by the IRS annually. Short-term parking, long-term parking or cab fare associated with airport departure and arrival may be allowable expenses. Valet parking will not be allowed unless it is the least expensive or only option. Car rental rates may be reimbursed for car rentals no greater than the intermediate or standard classification. The City will not reimburse any other travel methods or expenses. The City will pay for lodging, meals, and miscellaneous expenses on a per diem basis only, in accordance with the current per diem rates published by the IRS annually. The City will not pay for Contractor expenses exceeding the per diem rates. Receipts for all reimbursable expenses must be provided with the Contractor’s invoice.

43. ELECTRONIC SIGNATURE

This Agreement and all other documents contemplated hereunder may be executed using electronic signature with delivery via facsimile transmission, by scanning and transmission of electronic files in Portable Document Format (PDF) or other readily available file format, or by copy transmitted via email, or by other electronic means and in one or more counterparts, each of which shall be (i) an original, and all of which taken together shall constitute one and the same agreement, (ii) a valid and binding agreement and fully admissible under state and federal rules of evidence, and (iii) enforceable in accordance with its terms

44. APPENDICES

The following Appendices are made a part of this Agreement:

1. Schedule A – Price Sheet
2. Schedule B – General Construction Terms and Conditions
3. Schedule C – Special Contract Terms and Conditions
4. Schedule D – General Specifications
5. Schedule E – Special and Technical Specifications
6. Schedule F – Scope of Work
7. Exhibit 1 – Performance, Labor and Material Payment, and Maintenance Bonds
8. Exhibit 2 – Minimum Insurance Requirements

CONTRACT SIGNATURE PAGE

IN WITNESS WHEREOF, the parties have caused these presents to be executed on the day and the year first above written.

This Contract is executed in one (1) original copy.

THE CITY OF COLORADO SPRINGS, COLORADO:

SECOND PARTY:	
Corporate Name	
Signature	Date
Title	

EXHIBIT 3 EXCEPTIONS

Print the words "no exceptions"(here)_____ if there are no exceptions taken to any of the terms, conditions, or specifications of these proposal documents or contract. If there are exceptions taken to any of the terms, conditions, or specifications of the proposal document or contract, they must be clearly stated on a separate sheet of paper attached to this sheet and returned with your proposal.
Note: All potential Offerors are hereby advised that exceptions taken may be considered during the evaluation phase which may affect the final scoring of proposals. Offerors stipulating that the City must use their contract or agreement may be determined non-responsive and their Proposal determined unacceptable.

Company Name: _____

Address: _____
(City, State and Zip Code)

Authorized Signature: _____

Date: _____

Printed Name/Title: _____

Return this form with your Proposal.

EXHIBIT 4 RESERVED

SEE SCHEDULE E – INSURANCE REQUIREMENTS

EXHIBIT 5 RESERVED

SEE SCHEDULE D – SCOPE OF WORK

EXHIBIT 6 – QUALIFICATION STATEMENT

CITY OF COLORADO SPRINGS QUALIFICATION STATEMENT

This statement will provide information which will enable the City to evaluate the qualifications of your firm and staff with regard to the requirements of this Request for Proposal. Please complete this form in its entirety and submit it (in the number of copies requested) along with the other required proposal documents. If a request in the Qualification Statement is contained in the proposal, indicate the section in the proposal where that information can be found.

(PRINT)
FIRM NAME: _____
ADDRESS: _____
CITY STATE ZIP: _____
AUTHORIZED REPRESENTATIVE: _____
TITLE: _____
AUTHORIZED SIGNATURE: _____
PHONE: _____ FAX: _____
E-MAIL ADDRESS: _____

1. TYPE OF BUSINESS

CORPORATION ☐ INDIVIDUAL ☐
PARTNERSHIP ☐ JOINT VENTURE ☐
OTHER: _____

2. TYPE OF LICENSE & LOCATION

_____
_____
_____

3. TYPE OF SERVICE TO BE PROVIDED FOR RFP: _____
_____

4. NUMBER OF YEARS IN BUSINESS: _____

5. ON A SEPARATE SHEET PROVIDE A BRIEF HISTORY OF YOUR FIRM, STAFF SIZE AND EXPERIENCE. SUBMIT A RESUME FOR THE PROJECT MANAGER AND EACH KEY PERSONNEL ASSIGNED TO THIS PROJECT.

6. WHAT OTHER NAME(S) HAS YOUR COMPANY OPERATED UNDER: _____
_____

7. HAVE YOU OR YOUR FIRM EVER FAILED TO COMPLETE ANY WORK AWARDED TO YOU? YES ☐ NO ☐ IF "YES", EXPLAIN:
_____
_____
_____

8. HAS ANY OFFICER OR PARTNER OF YOUR ORGANIZATION EVER BEEN AN OFFICER OR PARTNER OF ANOTHER ORGANIZATION THAT FAILED TO COMPLETE A CONTRACT WITHIN THE LAST FIVE (5) YEARS? YES ☐ NO ☐
IF "YES", EXPLAIN:

9. HAS YOUR FIRM OR ANY PARTNERS OR OFFICERS EVER BEEN INVOLVED IN ANY BANKRUPTCY ACTION? YES ☐ NO ☐ IF "YES", EXPLAIN:

_____

_____

_____

_____

10. ARE YOU PRESENTLY INVOLVED IN ANY LITIGATION WITH ANY GOVERNMENT AGENCY? YES ☐ NO ☐ IF "YES", EXPLAIN TYPE, KIND, PLAINTIFF, DEFENDANT, ETC., AND STATE THE CURRENT STATUS:

_____

_____

_____

_____

11. BANK REFERENCE: _____

ADDRESS: _____

CONTACT: PHONE:

12. LIST THREE (3) SIMILAR PROJECTS (LOCAL OR STATE-WIDE) **FROM LAST FIVE (5) YEARS**-INCLUDE LOCATION OF PROJECT, SIZE OF PROJECT (CONTRACT AMOUNT), CONTACT NAME, ADDRESS, TELEPHONE NUMBERS

NOTE: DETAILED INFORMATION ON THESE PROJECTS MAY ALSO BE REQUESTED IN THE RFP PACKAGE.

1. Location of Project:

Size of Project:

Contract Amount:

Contact Name and Title:

Contract Address:

Contact telephone and FAX Numbers:

2. Location of Project:

Size of Project:

Contract Amount:

Contact Name:

Contact Address:

Contact telephone and FAX Numbers:

3. Location of Project:

Size of Project:

Contract Amount:

Contact Name:

Contact Address:

Contact telephone and FAX Numbers:

13. LIST **CURRENT** SIMILAR PROJECTS (LOCAL OR STATE-WIDE) UNDER CONTRACT-INCLUDE LOCATION OF PROJECT, SIZE OF PROJECT (CONTRACT AMOUNT) CONTACT NAME, ADDRESS, TELEPHONE NUMBERS.

NOTE: DETAILED INFORMATION ON THESE PROJECTS MAY ALSO BE REQUESTED IN THE RFP PACKAGE.

1. Location of Project:

Size of Project:

Contract Amount:

Contact Name and Title:
Contact Address:

Contact telephone and FAX Numbers:

2. Location of Project:
Size of Project:
Contract Amount:
Contact Name and Title:
Contact Address:
Contact telephone and FAX Numbers:

3. Location of Project:
Size of Project:
Contract Amount:
Contact Name and Title:
Contact Address:
Contact telephone and FAX Numbers:

14. LIST OF SUB-CONTRACTORS TO BE USED FOR THIS PROJECT:
(INCLUDE NAME, ADDRESS, TELEPHONE NUMBER, TYPE OF WORK)

1. Name:
Address:
Telephone Number:
Type of Work:

2. Name:
Address:
Telephone Number:
Type of Work:

3. Name:
Address:
Telephone Number:
Type of Work:

IF ADDITIONAL INFORMATION IS PROVIDED ON A SEPARATE SHEET FOR ANY OF THE ITEMS, CLEARLY SPECIFY WHERE IT CAN BE LOCATED IN YOUR PROPOSAL PACKAGE.

EXHIBIT 7 – EVALUATION SCORESHEET

PROPOSAL EVALUATION SCORE SHEET
SOLICITATION NUMBER AND TITLE:

RFP EVALUATION CRITERIA DESCRIPTION	SCORE
1. TECHNICAL AREA The Offeror must explain its overall solution, considering the scope of work or statement of work provided. The content must include, but not necessarily be limited to, the following information.	
A. Understanding of and compliance with technical requirements	
In the Technical Area, the Offeror should address each work area in sufficient detail to demonstrate a clear and full understanding of the work. The proposal should not merely parrot the requirements of the RFP. Further, the Offeror should provide evidence of sufficient planning to ensure the work is completed on schedule and within budget. Consider the following questions. 1. Does the proposal demonstrate a contractor understanding of the requirements and goals of the Statement of Work, as well as industry standards and reasonable expectations for a company in the construction and lake management industry? 2. Does the proposal fully and completely address each requirement and goal of the Statement of Work? 3. Does the proposal provide solutions to indicate that requirements and goals will be met on schedule? Does the proposal address meeting the City's schedule requirements? 4. Does the proposal address limiting the impact on park operations? 5. Does it generally appear that the Offeror knows and thoroughly understands the business and requirement? **COMMENTS:**	**5 – Exceptional** **4 – Very Good** **3 – Satisfactory** **2 – Marginal** **1 – Unacceptable**
B. Project Approach	
In the Technical Area, the Offeror should clearly present proposed solutions and indicate that it has performed adequate planning to accomplish tasks as defined in the Statement of Work. Innovations, efficiencies, and detailed specifics are all encouraged. The Offeror must at least address the following areas: 1. Construction phasing and traffic control for the project. Explain the	**5 – Exceptional** **4 – Very Good** **3 – Satisfactory** **2 – Marginal** **1 – Unacceptable**

phases, traffic control for each phase, and the logic in the construction phasing. 2. Erosion and sediment control during all phases of construction as well as post construction efforts through permit closure. 3. Coordination with utilities. Discuss your understanding of the key utility relocations required for this project and how you will coordinate and phase your construction to both facilitate and accommodate those relocations and the constraints that they impose. 4. Schedule Management. Discuss your approach to schedule management including updating and reporting progress of the work. 5. Quality Control. Discuss your quality control plan, processes and approach to ensure that the City receives a quality product. 6. Safety. Discuss the contractor's approach and commitment to safety for both construction workers and the public traveling through the construction site. 7. Potential issues that your firm foresees with this project and how you would make adjustments if encountered. Describe factors limiting construction phasing flexibility and potential remedies. Consider the following questions. 1. Does the proposal include a complete plan to accomplish each requirement, including subcontracting (if applicable)? 2. Does the proposal demonstrate that appropriate and qualified personnel and equipment will be provided to carry out the requirement? 3. Is the proper level of effort directed toward each requirement? Does the level of effort look unrealistically low or unreasonably high? **COMMENTS:**	
Sum of Ratings in Technical Area (Add numbers in Section 1.A. and 1.B):	
2. MANAGEMENT AREA The Offeror must explain its method of managing the work to be performed. The content must include, but no necessarily be limited to, the following information.	
A. Program Management Controls	
In the Management Area, the Offeror should provide a plan of operation, to include management of personnel, workload, schedule, and budget. It should also include	**5 – Exceptional** **4 – Very Good** **3 – Satisfactory**

an organization chart which demonstrates clear and effective lines of authority, responsibility, and communication for management, supervisory, and technical personnel. The plan should address which job classification or personnel will be assigned to each task and how that determination is made. Basic human resource management concepts should be addressed, including hiring, firing, discipline, incentive plans, etc. If the Offeror plans to subcontract more than 10% of the work, include information on how the Offeror plans to manage its subcontractors. The Offeror shall provide a detailed construction schedule for the project showing the key construction activities and how they will meet or better the County's timeframe and maximize construction efficiency to provide the best value to the City and minimize impacts to the public. The schedule shall be based on the Offeror's understanding and approach to the work as addressed above. Schedules submitted for this proposal shall assume a start date of May 1, 2024. Consider the following questions. 1. Does the proposal address the issues above in sufficient detail to demonstrate a sophisticated and mature management control system? 2. Are program management controls consistent with the technical portion of the proposal, especially regarding schedule and level of effort? 3. Does the plan and controls indicate that the Offeror will obtain, keep, and efficiently utilize high quality personnel? 4. Does the offer address corrective actions? 5. Does the proposal explain how the Offeror will remain within schedule and budget? **COMMENTS:**	**2 – Marginal** **1 – Unacceptable**
B. Past Performance/Relevant Experience and Key Personnel	
In the Management Area, the Offeror should provide at least three references or contracts demonstrating that it successfully provided services/products same or similar to those required in the RFP. The proposal should adequately explain how the projects were completed on schedule and within budget. Consider the following questions. 1. Does the proposal include at least three references or past performance citations? 2. Are the references or past performance citations relevant to the requirements of the Statement of Work of the RFP? 3. Does the Offeror explain how they were successful on the projects provided as past performance? 4. Does the Offeror apply the past performance to the City requirement in such a way as to demonstrate added value due to experience?	**5 – Exceptional** **4 – Very Good** **3 – Satisfactory** **2 – Marginal** **1 – Unacceptable**

In the Management Area, resumes must be provided for all personnel considered key, as required by the RFP. It is highly recommended that the Offeror provide sufficient content and detail to answer completely the following questions. Resumes do not count toward the page limitation. Explain how the key personnel were related to the projects cited as relevant past performance. Consider the following questions. 1. Does the Offeror provide complete resumes, including education, experience, background information, accomplishments, and other pertinent information? 2. Does the Offeror provide resumes for all key personnel, as required by the RFP? 3. Do the resumes demonstrate adequate professional, technical, and management levels to accomplish the work effectively and efficiently? **COMMENTS:**	
Sum of Ratings in Management Area (Add numbers in Sections 2.A. and 2. B.)	
3. PRICE/COST AREA	
In the Price Area, the Offeror should provide a detailed breakdown of the price for each year of performance. The price must be fully loaded/all-inclusive and include unit cost for material, labor, other direct costs (e.g. travel), indirect costs (i.e. overhead and general and administrative costs), and profit/fee. Offers must include sufficient detail to allow insight into the fairness and reasonableness of the price. If the contract type will be T&M, labor categories, labor rates, separated profit, and estimated material costs must be included in detail. In addition, although price may not be the most important factor, it is still very important to the City of Colorado Springs. The Offeror's pricing must be competitive as compared to the budget amount, market pricing in the industry, and the pricing of the other Offerors. Consider the following questions: 1. How does the price compare to the industry competition? 2. If low, is it unrealistically low? 3. If high, is there demonstrated added value for the additional cost? **COMMENTS:**	**5 – Exceptional** **4 – Very Good** **3 – Satisfactory** **2 – Marginal** **1 – Unacceptable**
Total Price/Cost Area (Insert number from Section 3 evaluation above):	
4. PROPOSAL PRESENTATION	

Presentation is an important factor. Offerors should provide a highly professional product, which is complete, accurate, easily understood, and effectively presented. **COMMENTS:**	**5 – Exceptional** **4 – Very Good** **3 – Satisfactory** **2 – Marginal** **1 – Unacceptable**
Total Proposal Presentation Area (Insert number from Section 4 evaluation above):	
EXCEPTIONS PROPOSED	
What (if any) exceptions (redlines to our terms and conditions) were proposed? Are they acceptable? **COMMENTS:**	**Pass/Fail**
INSURANCE EXCEPTIONS PROPOSED	
What (if any) exceptions (redlines to our insurance terms and conditions) were proposed? Are they acceptable? **COMMENTS:**	**Pass/Fail**
TOTAL SCORE – Add Evaluation Scores from Sections 1-4 and location bonus (if applicable). The sum is the total score.	Total Score:

Overall Proposal **Strengths:**

Overall Proposal **Weaknesses:**

EXHIBIT 8 – FEDERAL FORMS

CERTIFICATION REGARDING DEBARMENT, SUSPENSION AND OTHER RESPONSIBILITY MATTERS

The undersigned duly authorized official of the proposer certifies to the best of its knowledge and belief, that it and its principals:

A. Are not presently debarred, suspended, proposed for debarment, and declared ineligible or voluntarily excluded from covered transactions by any Federal department or agency.

B. Have not within a three-year period preceding this proposal been convicted of or had a civil judgement rendered against them for commission of fraud or a criminal offense in connection with obtaining, attempting to obtain or performing a public (federal, state or local) transaction or contract under a public transaction; violation of federal or state antitrust statutes or commission of embezzlement, theft, forgery, bribery, falsification, or destruction of records, making false statements or receiving stolen property.

C. Are not presently indicted for or otherwise criminally or civilly charged by a governmental entity (federal, state or local) with commission of any of the offenses enumerated in paragraph (B) of this certification; and

D. Have not within a three-year period preceding this application/proposal had one or more public transaction (federal, state or local) terminated for cause or default.

E. Are not on the Comptroller General's List of Ineligible Bidders or any similar list maintained by any other governmental entity.

Where the proposer is unable to certify to any of the statements in this certification, such prospective participant shall attach an explanation to this proposal.

(Check One)

I DO CERTIFY (_____) **I DO NOT CERTIFY (_____)**

Date: _____

Signature: _____

Title: _____

RESTRICTIONS ON LOBBYING CERTIFICATION

Pursuant to United States Public Law 101-121, Section 319, the undersigned duly authorized official of the proposer hereby certifies, to the best of her/his knowledge and belief, that:

1. No Federal appropriated funds have paid or will be paid, by or on behalf of the undersigned, to any person for the purpose of influencing or attempting to influence an officer or employee of any agency, a Member of Congress, an officer or employee of Congress, or an employee of a Member of Congress, in connection with the awarding of any Federal contract, the making of any Federal grant, the making of any Federal loan, the entering into of any cooperative agreement, and the extension, continuation, renewal, amendment, or modification of any Federal contract, grant, loan, or cooperative agreement.

2. If any funds other than Federal appropriated funds have been paid or will be paid to any person or agency for influencing or attempting to influence an officer or employee of any agency, a Member of Congress, an officer or employee of Congress, or an employee of a Member of Congress, in connection with this Federal contract, grant, loan, or cooperative agreement, the undersigned shall complete and submit a Standard Form-LLL, "Disclosure Form to Report Lobbying", in accordance with its instructions.

3. The undersigned duly authorized official shall require and ensure that the language of this certification be included in any award documents for subcontracts, grants, loans, and cooperative agreements, and that all subcontractors shall so certify and disclose accordingly.

This Certification is a material representation of fact, upon which reliance was placed when this transaction was made or entered into. The submission of this Certification is a prerequisite for making or entering into this transaction, imposed by Title 31 USC Section 1352. Any proposer (person) who fails to file the required certification shall be subject to civil penalty of not less than ten thousand dollars ($10,000) and not more than one hundred thousand dollars ($100,000) for each such failure to file.

Proposer: _____

Signature: _____

Title: _____

Date: _____

NON-COLLUSION AFFIDAVIT

The undersigned duly authorized official of the proposer hereby certifies, to the best of her/his knowledge and belief, that:

1. That I am an officer or employee of the _____(proposing entity) having the authority to sign on behalf of the corporation, and,

2. That the prices in the attached proposal were arrived at independently by _____ _____(proposing entity) without collusion, consultation, communication, or any agreement, for the purpose of restricting competition as to any matter relating to such prices with any other proposer or with any other competitor regarding an understanding, or planned common course of action with any other vendor of materials, supplies, equipment, or service described in the RFP/IFB designed to limit independent proposals or competition; and

3. That unless otherwise required by law, the contents and prices contained in the proposal have not been communicated by _____(proposing entity) or its employees or agents to any person not an employee or agent of _____ _____(proposing entity), or its surety on any bond furnished with the proposal, and will not be communicated to any such person prior to the official opening of the proposal; and,

4. That I have fully informed myself regarding the accuracy of the statements made in this affidavit.

Proposer: _____

Signature: _____

Title: _____

Date: _____

EQUAL EMPLOYMENT STATUS REPORT

Contractor's Name

_____

Street Address

_____

City _____State _____ Zip _____

This firm is:

_____Independently owned and operated

_____ An Affiliate Parent Company _____
or
_____ A Subsidiary of Address _____
or
_____ A Division City and State _____

Zip _____

1. Contractor ____ HAS ____ HAS NOT

Developed and has on file an affirmative action program in conformance with 41 CFR 60-2.

2. Contractor ____ HAS ____ HAS NOT

Participated in any previous contract or subcontract subject to the equal opportunity clause either with the City or any Federal agency.

3. Contractor ____ HAS ____ HAS NOT

Filed with the City, or where applicable, joint Reporting Committee, or other Federal Agency, all reports due under the applicable contract(s) or subcontract(s).

Contractor's Equal Employment Opportunity Program ____ HAS ____ HAS NOT been subject to a Federal Equal Opportunity Compliance Review. If so, then state date of Review below.

_____

Signature _____ Date _____

Title _____

SCHEDULES

Schedule A	Price Sheet
Schedule B	General Construction Terms and Conditions
Schedule C	Special Specifications
Schedule D	Scope of Work
Schedule E	Insurance Requirements
Schedule F	Clauses for Contracts Subject to Federal Requirements
Schedule G	Construction Plan Set

SCHEDULE A – PRICE SHEET

PLEASE SUBMIT SCHEDULE A – PRICE SHEET IN EXCEL FORMAT

SCHEDULE B – GENERAL CONSTRUCTION TERMS AND CONDITIONS

Schedule B -- General Construction Terms and Conditions, Version 100316 are hereby incorporated by reference, with the same force and effect as if they were given in full text. Upon request, the City will make their full text available. Also, the full text of a clause may be accessed electronically at this address:

https://www.coloradosprings.gov/finance/page/procurement-regulations-and-documents

The referenced General Construction Terms and Conditions will be incorporated in the resultant Contract.

SCHEDULE C – SPECIAL SPECIFICATIONS

The approved lake aeration system design will consist of one (1) 7.5-HP screw-type compressor operating eight (8) double-disk membrane diffusers. The compressor and its components are to be secured within an approved shed design (architectural and construction plans available from the City of Colorado Springs) located at the lake's shoreline (see Fig. 1). The aeration lines and diffusers are to be secured on the lakebed at specific locations (Fig. 1) and are placed to target the deepest parts of the lake while maintaining relatively full lake coverage.

The approved design will include a liquid injection system to be housed in the compressor shed. A 275-gallon chemical (corrosive) resistant tank with an electronic pump and valve components will be used to inject liquid beneficial bacteria, algaecides, oxidizers, etc. through three (3) chemical resistant lines attached (or "piggy-backed) to three specific aeration diffuser lines (Fig. 1) using heavy duty zip ties or other brackets. The nozzle end of the injection line is to be mounted on the diffuser in a manner that the diffuser action will disperse the liquid (i.e., secured above or near the diffuser disk using bracket, etc.).

Two 4-inch underground PCV sleeves are to be installed (18 inches minimum depth) side by side from the compressor shed's floor at the location of the 8-valve air manifold, to the lake's shoreline, extending up to 10 ft into the water. Each underground PVC sleeve will house four diffuser lines. The three injection lines will also extend from the tank (inside the shed) and through the appropriate PVC line. Four-inch PVC elbows will be installed on each PVC line at or below the shed's floor entry point to allow easier installation of the diffuser lines. Eight 5/8-inch ID poly tubing lines (4 in each PVC sleeve) will be installed from the 8-valve air manifold (i.e., inside the shed), down through the PVC sleeves, and extend to the water's edge (or end of PVC sleeve). It is important that the PVC sleeves at or near the shed's location be installed before construction of the shed's concrete floor. As an alternative, the PVC sleeves can be installed through one of the shed's walls, located near the floor, where the PVC sleeves can extend outside of the shed, then underground to the lake's shore.

At each end of the poly tubing lines, weighted, self-sinking diffuser tubing (5/8" ID) will be attached and installed per design (Fig. 1). At the end of each weighted tubing line (location and length per design) a self-weighted, double-disk diffuser assembly will be attached and submerged to the lakebed.

The approved design will include no surface structures and only aeration and injection lines are to be installed on the lakebed. This system was designed to be boater friendly and there are to be no obstructions for boaters.

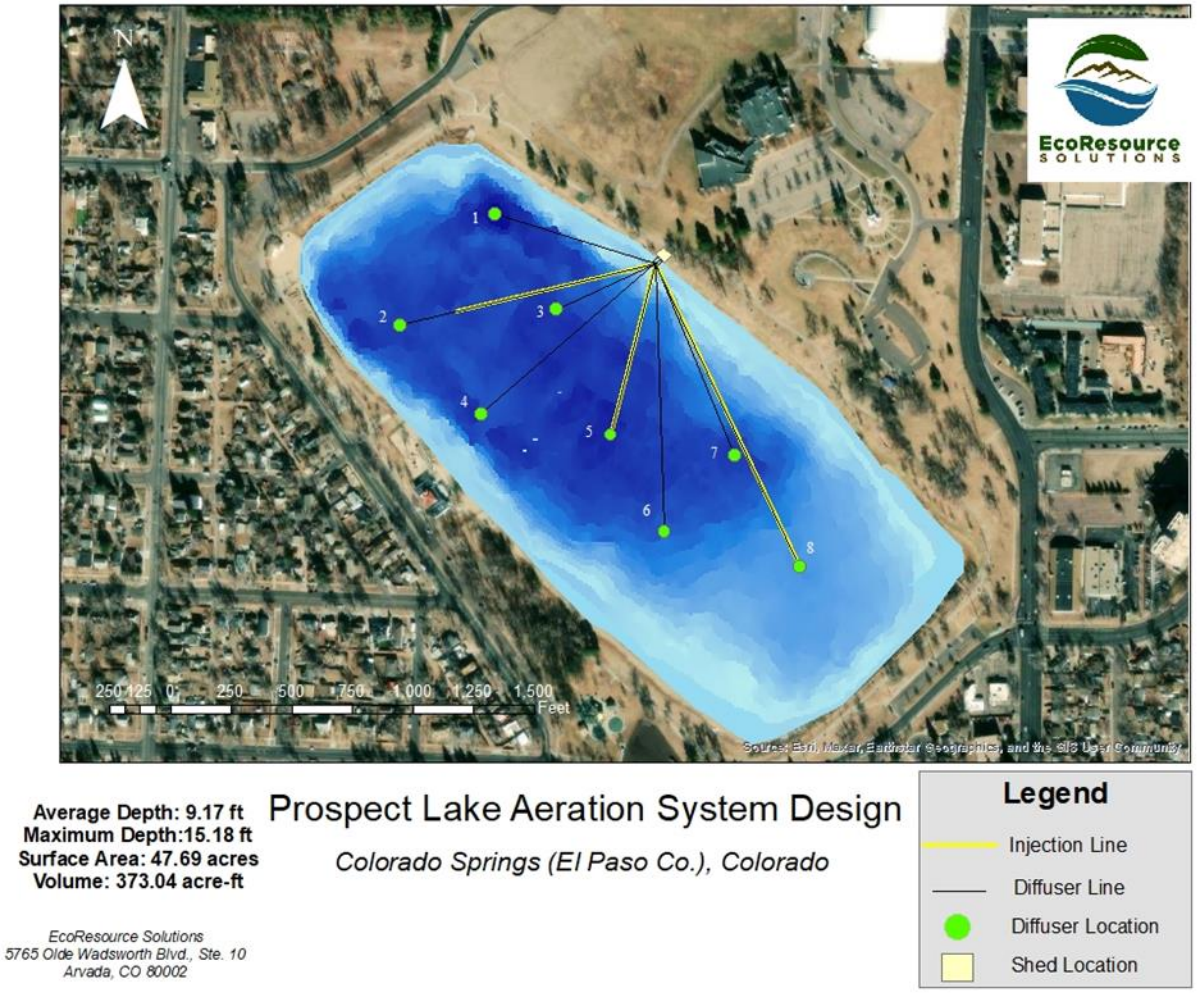

Figure 1 – Illustration of an approved lake aeration system design using eight diffusers and three liquid injection lines, Prospect Lake, Colorado Springs (El Paso Co.), Colorado.

C.1 EQUIPMENT AND PARTS SPECIFICATIONS

Equipment/Part	Quantity
Lake Aeration System	
Inside the Compressor Shed	
Electrical components (230V single phase) – breaker panel box, fuses, wiring, connectors, conduit, wall mounting brackets, etc. To be installed on shed wall to power compressor, etc.	1
Ingersoll Rand UP6 – 7.5 HP TAS, 125 psi rotary screw air compressor (or equivalent); 230V single phase; 80-gallon air receiver (mounted underneath compressor); 230V single phase starter; hour meter	1
Ingersoll Rand power outage restart option (or equivalent)	1
Ingersoll Rand electronic drain valve (or equivalent)	1
Ingersoll Rand F-series pre-filter (or equivalent)	2
Ingersoll Rand air dryer (for 7.5 HP) (or equivalent)	1

Ingersoll Rand PolySep Green oil-water separator (or equivalent)	1
Ingersoll Rand PacE flow controller (or equivalent)	1
Startup kit (with Ultra Coolant)	1
Ultra Coolant (additional supply)	1
Standard crating from manufacturer or supplier	2
Air Distribution (from Compressor to 8-valve Air Manifold)	
½" x 10' copper pipe	6
½" copper pipe couplings	20
½" copper pipe tee connectors	8
½" x 10' stainless steel braided supply line	2
1-1/2" galvanized or copper pipe wall brackets	20
½" 90-degree copper slip elbow fittings	10
½" barbless flip check valves (not for air valve manifold)	6
8-valve air manifold (½") – to be custom made using combination of 8 flip check valves and copper fittings (or equivalent 8-valve manifold available on the market)	1
½" barbed connectors (metal) – to be installed in the outlet of the check valves and allowing connection of rubber air lines (below)	8
5/8" ID x 5' rubber airline hose – to be installed from the air valve outlet to the PVC sleeves (then attached to the underground poly tubing)	5
#12 stainless steel clamps – for connecting rubber air valve tubing	8
From Shed to Shoreline (Underground PVC Sleeve Components)	
4" Sch. 40 PVC 90-degree (or 45-degree, depending on slope) elbows	2
4" x 10' Sch. 40 PVC pipe	10
4" Sch. 40 PVC couplers	6
5/8" ID x 100' standard poly tubing	4
½" barbed poly connectors	16
#12 stainless steel clamps	32
From Shoreline to Lakebed	
#12 stainless steel clamps	56
½" barbed poly connectors	16
5/8" ID self-weighted (self-sinking) aeration tubing (estimated from aerial measurements)	
Diffuser line 1 (ft)	750
Diffuser line 2 (ft)	1,200
Diffuser line 3 (ft)	500
Diffuser line 4 (ft)	1,050
Diffuser line 5 (ft)	800
Diffuser line 6 (ft)	1,200
Diffuser line 7 (ft)	940
Diffuser line 8 (ft)	1,500
Total	**7,940**
EasyPro QS2 quick sink double-disk aeration diffuser assemblies (or equivalent)	8
Liquid Injection System (Inside the Compressor Shed)	
Electrical components to power pump from installed panel	
275-gallon low profile rectangle tank (chemical resistant) with elevated pump and aluminum frame	1
Strap kit (to secure tank)	1
Internal tank dual jet agitation assembly	1
Pumptec PN 81524-x3/m930 electric pump (or equivalent)	1

Pumptec PN 70174 bypass regulator (or equivalent)	1
27 DCGC battery	1
Check valve (PVC or flip type)	1
½” stainless steel hose barb	1
Stop Valves (PVC)	12
Catch Bucket	1
From Compressor to Designated Diffuser Locations	
Blue-stripe ½” x 300’ 600 PSI braided tubing with liner (chemical resistant)	
Diffuser line 2 (ft)	1,200
Diffuser line 5 (ft)	800
Diffuser line 8 (ft)	1,500
Total (ft)	**3,500**
Total (per 300 coil)	**11.67**
PVC nozzles (to be fitted at diffusers)	3
Nozzle/tubing end mounting assemblies (mounting at or near diffuser disks)	3
Heavy duty zip-ties (to secure injection lines to diffuser lines)	350

SCHEDULE D – SCOPE OF WORK

D.1 BACKGROUND

The City of Colorado Springs is seeking an experienced and qualified licensed contractor to construct an aeration system and pump house for Prospect Lake in Memorial Park. The pump house will hold the compressor and associated infrastructure needed to support the aeration and treatment injection system for Prospect Lake. The project is funded under the American Rescue Plan Act (ARPA) which requires the project to be completed before 2026. The City requires this project be completed no later than October 1, 2025, but would prefer it be completed in 2024. The offeror must be able to provide a construction schedule for an anticipated start date of June 1, 2024. The offeror must be able to illustrate similar project experience in its response.

The Scope of Services to be provided shall include, but not be limited to: preparation and submittal for necessary construction permits; furnishing of all labor, materials, equipment, component/devices, transportation, fuel, supervision, and inspections; connection to existing water service line and sanitary line; connection to existing power, natural gas, and other private utilities; and all other incidentals needed to complete all necessary work, in accordance with this proposal and as indicated in the attached specifications and drawings.

Project base bid consists of construction of a 264 square foot conditioned aeration pump house building to look similar to other building around lake. Construction a functioning aeration and treatment system in Prospect Lake based on the attached specification from Eco Resource Solutions. Include a line item for (1) additional compressor for aeration system.

The Project includes possible utilities and other civil engineering work as shown on the civil engineering drawings, landscaping, and mechanical and electrical work. Proposers are expected to examine the drawings, specifications, proposal documents, proposed contract forms, terms, and conditions, and all other instructions and solicitation documents.

Proposers are expected to visit the jobsite to determine all requirements and conditions that will affect the work. Failure to do so will not relieve a proposer from responsibility to know what is contained in this request for proposal, or site conditions affecting the work.

The successful offeror will most likely be a highly qualified firm that not only offers a cost proposal that will be within the City's construction budget, but also be able to demonstrate their ability to complete this project within the requested completion time or earlier. Furthermore, the successful contractor based on strong partnerships with their subcontractors, has the ability to not only obtain fair and reasonable competitive prices for the products, but also a commitment to ensure the production necessary to meet proposed schedule milestones as well as overall proposed completion date.

D.2 ITEMS TO NOTE

A. The Contractor shall be responsible for planning and providing perimeter site fencing and signage as required to ensure the safety and security of the site from the public.

B. Contractor shall be responsible for all utility connections.

C. Contractor shall be responsible to provide a dumpster; otherwise, discarded material shall be removed daily. No discarded construction material shall be dumped or remain on site and must be legally disposed of.

D. Contractor shall put in measures to prevent contamination of Prospect Lake from the construction.

D.3 ACCEPTANCE

The City of Colorado Springs will review each installation to determine compliance prior to final acceptance of the work. Any work not installed in accordance with the plans and specifications and rejected by the City of Colorado Springs must be removed and replaced at the Contractor's expense.

D.4 CLEANING

Perform cleaning during installation of the work and upon completion of the work. Remove from site all excess materials, soil, debris, and equipment. Any spoils created from this work must become the property of the Contractor and must be disposed of in a legal and proper manner.

D.5 FIELD CONDITIONS

It must be the responsibility of the Contractor to verify all site conditions before they submit their bid. Verify and coordinate all work to field locations and dimensions. Contractor is responsible for the installation of temporary construction fencing and signage to safely enclose the work area along with silt fencing for entire perimeter of site work.

D.6 MEETINGS

Weekly meetings with city staff for project progress meetings, issue identification and resolution and facilitation of departmental input. Coordinate a pre-construction meeting with departmental representatives.

D.7 CONSTRUCTION

Construction must be in accordance with the terms and conditions in this Invitation to proposal, construction documents provided under Exhibit and as stated in the Scope of

Services. All work must meet all applicable Federal, State, and local building codes and must be performed by qualified licensed contractors in their respective areas (electrical, mechanical, plumbing, fire, etc.). The contractor must complete all work per Construction Documents including the associated specifications.

D.8 PERMIT REQUIREMENTS

Contractor responsible to obtain any additional necessary permits and inspection approvals and pay all additional related fees for the required work included under this solicitation. Contractor must provide a copy of all obtained additional permits to the City of Colorado Springs. Contractor shall be responsible to install a Permit Posting Box Unit. Approved plans and permits must be available on site for the inspector.

D.9 PROPERTY REPLACEMENT

Property at the site, including turf (sod), concrete pavement, asphalt, and fencing requiring movement during the course of construction, or any other damage due to the work performed by contractor must be reinstalled, repaired, or replaced before final payment is made.

D.10 SAFETY PRECAUTIONS

The contractor must be responsible for initiating, maintaining, and supervising all safety precautions in connection with the work and applies continuously throughout the contract term. The contractor is responsible for meeting or exceeding all OSHA standards on the site as well as meeting any state or local safety standards. The contractor must erect and maintain all reasonable safeguards for safety and protection, including posting danger signs and other warning signs against hazards. It is the responsibility of the contractor to provide a safe environment for park patrons and must monitor and maintain fencing/barricades to ensure continued safety.

D.11 USE OF SITE

The contractor must confine its operations at the site to areas permitted by law, ordinances, and permits. The contractor must not unreasonably encumber the site with materials, equipment or trailers nor shall the entrance be blocked or otherwise prevent reasonable access to the site, other working, and parking areas, completed portions of the work and/or properties and storage areas.

D.12 UTILITIES

Contractor is responsible for making appropriate contact to ensure utility locations have been marked prior to excavation and trenching. The contractor must protect all utilities (including irrigation) encountered while performing its work. The contractor must exercise

due care when excavating around utilities and must restore any damaged utilities, at its own expense, to the same condition or better as existed prior to start of work.

D.13 WARRANTY AND GUARANTEES

The contractor must furnish the City of Colorado Springs with a signed Two (2) year warranty and maintenance program covering all systems for Two (2) years from the date of final acceptance of the project by City of Colorado Springs. The contractor is responsible for securing warranties and guarantees for any materials, equipment, or fixtures to be incorporated into the project.

D.14 WORKMANSHIP

A. All work and materials are subject to the approval of the City of Colorado Springs.

B. All products must be inspected by the City of Colorado Springs for damage and chipped or marred finish. Contractor must replace any damaged or rejected products at no additional cost to the owner. The owner's representative may at his option authorize acceptance of chipped or scratched painted surfaces repaired by contractor at his own risk.

D.15 TIMELINE

The City requires this project be completed no later than October 1, 2025, but would prefer it be completed in 2024.

SCHEDULE E – INSURANCE REQUIREMENTS

The following listed minimum insurance requirements shall be carried by all contractors and consultants unless otherwise specified in the City's solicitation package, Special Provisions, or Standard Specifications.

1.	X	Commercial General Liability for limits not less than $1,000,000 combined single limit with $2,000,000 aggregate for bodily injury and property damage for each occurrence. Coverage shall include blanket contractual, broad form property damage, products and completed operations.
2.	X	Workers' Compensation and Employers Liability as required by statute. Employers Liability coverage is to be carried for a minimum limit of $1,000,000.
3.	X	Automobile Liability covering any auto (including owned, hired, and non-owned autos) with a minimum of $1,000,000 each accident combined single limit.

Except for workers' compensation and employer's liability insurance, the **City of Colorado Springs must be named as an additional insured**. Certificates of Insurance must be submitted before commencing the work and provide 30 days' notice prior to any cancellation, non-renewal, or material changes to policies required under the contract.

All coverage furnished by contractor is primary, and any insurance held by the City of Colorado Springs is excess and non-contributory.

The undersigned certifies and agrees to carry and maintain the insurance requirements indicated above throughout the contract Period of Performance.

_____

(Name of Company)

_____

(Signature) *(Date)*

SCHEDULE F – CLAUSES FOR CONTRACTS SUBJECT TO FEDERAL REQUIREMENTS

1. EQUAL EMPLOYMENT OPPORTUNITY

To view the City of Colorado Springs EEOP (Equal Employment Opportunity Plan) Utilization Report, the link is www.coloradosprings.gov/eeop.

During the performance of this Contract, the Contractor agrees as follows:

A. The Contractor will not discriminate against any employee or applicant for employment because of race, color, religion, sex, or national origin. The Contractor will take affirmative action to ensure that applicants are employed, and that employees are treated during employment without regard to their race, color, religion, sex, or national origin. such action shall include, but not be limited to the following: Employment, upgrading, demotion, or transfer; recruitment or recruitment advertising; layoff or termination; rates of pay or other forms of compensation; and selection for training, including apprenticeship. The Contractor agrees to post in conspicuous places, available to employees and applicants for employment, notices to be provided setting forth the provisions of this nondiscrimination clause.

B. The Contractor will, in all solicitations or advertisements for employees placed by or on behalf of the Contractor, state that all qualified applicants will receive considerations for employment without regard to race, color, religion, sex, or national origin.

C. The Contractor will send to each labor union or representative of workers with which he has a collective bargaining agreement or other contract or understanding, a notice to be provided advising the said labor union or workers' representatives of the contractor's commitments under this section, and shall post copies of the notice in conspicuous places available to employees and applicants for employment.

D. The Contractor will comply with all provisions of Executive Order 11246 of September 24, 1965, and of the rules, regulations, and relevant orders of the Secretary of Labor.

E. The Contractor will furnish all information and reports required by Executive Order 11246 of September 24, 1965, and by rules, regulations, and orders of the Secretary of Labor, or pursuant thereto, and will permit access to his books, records, and accounts by the administering agency and the Secretary of Labor for purposes of investigation to ascertain compliance with such rules, regulations, and orders.

F. In the event of the Contractor's noncompliance with the nondiscrimination clauses of this contract or with any of the said rules, regulations, or orders, this contract may be canceled, terminated, or suspended in whole or in part and the Contractor may be declared ineligible for further Government contracts or federally assisted construction contracts in accordance with procedures authorized in Executive Order 11246 of

September 24, 1965, and such other sanctions may be imposed and remedies invoked as provided in Executive Order 11246 of September 24, 1965, or by rule, regulation, or order of the Secretary of Labor, or as otherwise provided by law.

G. The Contractor will include the portion of the sentence immediately preceding paragraph (1) and the provisions of paragraphs (1) through (7) in every subcontract or purchase order unless exempted by rules, regulations, or orders of the Secretary of Labor issued pursuant to section 204 of Executive Order 11246 of September 24, 1965, so that such provisions will be binding upon each subcontractor or vendor. The Contractor will take such action with respect to any subcontract or purchase order as the administering agency may direct as a means of enforcing such provisions, including sanctions for noncompliance: Provided, however, that in the event the Contractor becomes involved in, or is threatened with, litigation with a subcontractor or vendor as a result of such direction by the administering agency the Contractor may request the United States to enter into such litigation to protect the interests of the United States.

H. Subcontracts. Each nonexempt prime contractor or subcontractor shall include the equal opportunity clause in each of its nonexempt subcontracts.

I. Incorporation by reference. The equal opportunity clause may be incorporated by reference in all Government contracts and subcontracts, including Government bills of lading, transportation requests, contracts for deposit of Government funds, and contracts for issuing and paying U.S. savings bonds and notes, and such other contracts and subcontracts as the Deputy Assistant Secretary may designate.

J. Incorporation by operation of the order. By operation of the order, the equal opportunity clause shall be considered to be a part of every contract and subcontract required by the order and the regulations in this part to include such a clause whether or not it is physically incorporated in such contracts and whether or not the contract between the agency and the contractor is written.

K. Adaptation of language. Such necessary changes in language may be made in the equal opportunity clause as shall be appropriate to identify properly the parties and their undertakings. [43 FR 49240, Oct. 20, 1978, as amended at 62 FR 66971, Dec. 22, 1997]

2. EQUAL EMPLOYMENT OPPORTUNTY REPORTS AND OTHER REQUIRED INFORMATION

A. Requirements for prime contractors and subcontractors.

1. Each prime contractor and subcontractor shall file annually, on or before the September 30, complete and accurate reports on Standard Form 100 (EEO-1) promulgated jointly by the Office of Federal Contract Compliance Programs, the Equal Employment Opportunity Commission and Plans for Progress or such form as may hereafter be promulgated in its place if such prime contractor or subcontractor (i) is not exempt from the provisions of these regulations in accordance with § 60-1.5; (ii) has 50 or more employees; (iii) is a prime contractor or first tier subcontractor; and (iv) has a contract, subcontract or

purchase order amounting to $50,000 or more or serves as a depository of Government funds in any amount, or is a financial institution which is an issuing and paying agent for U.S. savings bonds and savings notes: Provided, That any subcontractor below the first tier which performs construction work at the site of construction shall be required to file such a report if it meets requirements of paragraphs (a)(1) (i), (ii), and (iv) of this section.

2. Each person required by § 60-1.7(a)(1) to submit reports shall file such a report with the contracting or administering agency within 30 days after the award to him of a contract or subcontract, unless such person has submitted such a report within 12 months preceding the date of the award. Subsequent reports shall be submitted annually in accordance with § 60-1.7(a)(1), or at such other intervals as the Deputy Assistant Secretary may require. The Deputy Assistant Secretary may extend the time for filing any report.

3. The Deputy Assistant Secretary or the applicant, on their own motions, may require a contractor to keep employment or other records and to furnish, in the form requested, within reasonable limits, such information as the Deputy Assistant Secretary or the applicant deems necessary for the administration of the order.

4. Failure to file timely, complete and accurate reports as required constitutes noncompliance with the prime contractor's or subcontractor's obligations under the equal opportunity clause and is ground for the imposition by the Deputy Assistant Secretary, an applicant, prime contractor or subcontractor, of any sanctions as authorized by the order and the regulations in this part.

B. Requirements for bidders or prospective contractors—

1. Certification of compliance with Part 60-2: Affirmative Action Programs. Each agency shall require each bidder or prospective prime contractor and proposed subcontractor, where appropriate, to state in the bid or in writing at the outset of negotiations for the contract: (i) Whether it has developed and has on file at each establishment affirmative action programs pursuant to Part 60-2 of this chapter; (ii) whether it has participated in any previous contract or subcontract subject to the equal opportunity clause; (iii) whether it has filed with the Joint Reporting Committee, the Deputy Assistant Secretary or the Equal Employment Opportunity Commission all reports due under the applicable filing requirements.

2. Additional information. A bidder or prospective prime contractor or proposed subcontractor shall be required to submit such information as the Deputy Assistant Secretary requests prior to the award of the contract or subcontract. When a determination has been made to award the contract or subcontract to a specific contractor, such contractor shall be required, prior to award, or after the award, or both, to furnish such other information as the applicant or the Deputy Assistant Secretary requests.

C. Use of reports. Reports filed pursuant to this section shall be used only in connection with the administration of the order, the Civil Rights Act of 1964, or in furtherance of the purposes of the order and said Act.[43 FR 49240, Oct. 20, 1978, as amended at 62 FR 66971, Dec. 22, 1997]

3. CONSTRUCTION WAGE RATE REQUIREMENTS (DAVIS BACON) (From FAR 52.222-6)

The term “Contracting Officer” herein shall refer to the City of Colorado Springs Contracting Specialist assigned to this contract.

A. Definition.-“Site of the work”-

1. Means-

a. The primary site of the work. The physical place or places where the construction called for in the contract will remain when work on it is completed.
b. The secondary site of the work, if any. Any other site where a significant portion of the building or work is constructed, provided that such site is-
1. Located in the United States; and
2. Established specifically for the performance of the contract or project;

2. Except as provided in paragraph (3) of this definition, includes any fabrication plants, mobile factories, batch plants, borrow pits, job headquarters, tool yards, etc., provided-

a. They are dedicated exclusively, or nearly so, to performance of the contract or project; and
b. They are adjacent or virtually adjacent to the “primary site of the work” as defined in paragraph (a)(1)(i), or the “secondary site of the work” as defined in paragraph (a)(1)(ii) of this definition;

3. Does not include permanent home offices, branch plant establishments, fabrication plants, or tool yards of a Contractor or subcontractor whose locations and continuance in operation are determined wholly without regard to a particular Federal contract or project. In addition, fabrication plants, batch plants, borrow pits, job headquarters, yards, etc., of a commercial or material supplier which are established by a supplier of materials for the project before opening of bids and not on the Project site, are not included in the “site of the work.” Such permanent, previously established facilities are not a part of the “site of the work” even if the operations for a period of time may be dedicated exclusively or nearly so, to the performance of a contract.

B. All laborers and mechanics employed or working upon the site of the work will be paid unconditionally and not less often than once a week, and without subsequent deduction or rebate on any account (except such payroll deductions as are permitted by regulations issued by the Secretary of Labor under the Copeland Act (29 CFR part 3)), the full amount

of wages and bona fide fringe benefits (or cash equivalents thereof) due at time of payment computed at rates not less than those contained in the wage determination of the Secretary of Labor which is attached hereto and made a part hereof, or as may be incorporated for a secondary site of the work, regardless of any contractual relationship which may be alleged to exist between the Contractor and such laborers and mechanics. Any wage determination incorporated for a secondary site of the work shall be effective from the first day on which work under the contract was performed at that site and shall be incorporated without any adjustment in contract price or estimated cost. Laborers employed by the construction Contractor or construction subcontractor that are transporting portions of the building or work between the secondary site of the work and the primary site of the work shall be paid in accordance with the wage determination applicable to the primary site of the work.

Contributions made or costs reasonably anticipated for bona fide fringe benefits under section 1(b)(2) of the Construction Wage Rate Requirements statute on behalf of laborers or mechanics are considered wages paid to such laborers or mechanics, subject to the provisions of paragraph (e) of this clause; also, regular contributions made or costs incurred for more than a weekly period (but not less often than quarterly) under plans, funds, or programs which cover the particular weekly period, are deemed to be constructively made or incurred during such period.

Such laborers and mechanics shall be paid not less than the appropriate wage rate and fringe benefits in the wage determination for the classification of work actually performed, without regard to skill, except as provided in the clause entitled Apprentices and Trainees. Laborers or mechanics performing work in more than one classification may be compensated at the rate specified for each classification for the time actually worked therein; provided that the employer's payroll records accurately set forth the time spent in each classification in which work is performed.

The wage determination (including any additional classifications and wage rates conformed under paragraph (c) of this clause) and the Construction Wage Rate Requirements (Davis-Bacon Act) poster (WH-1321) shall be posted at all times by the Contractor and its subcontractors at the primary site of the work and the secondary site of the work, if any, in a prominent and accessible place where it can be easily seen by the workers.

C. The Contracting Officer shall require that any class of laborers or mechanics which is not listed in the wage determination and which is to be employed under the contract shall be classified in conformance with the wage determination. The Contracting Officer shall approve an additional classification and wage rate and fringe benefits therefor only when all the following criteria have been met:

1. The work to be performed by the classification requested is not performed by a classification in the wage determination.
2. The classification is utilized in the area by the construction industry.

3. The proposed wage rate, including any bona fide fringe benefits, bears a reasonable relationship to the wage rates contained in the wage determination.

If the Contractor and the laborers and mechanics to be employed in the classification (if known), or their representatives, and the Contracting Officer agree on the classification and wage rate (including the amount designated for fringe benefits, where appropriate), a report of the action taken shall be sent by the Contracting Officer to the Administrator of the:
Wage and Hour Division
Employment Standards Administration
U.S. Department of Labor
Washington, DC 20210
The Administrator or an authorized representative will approve, modify, or disapprove every additional classification action within 30 days of receipt and so advise the Contracting Officer or will notify the Contracting Officer within the 30-day period that additional time is necessary.

In the event the Contractor, the laborers or mechanics to be employed in the classification, or their representatives, and the Contracting Officer do not agree on the proposed classification and wage rate (including the amount designated for fringe benefits, where appropriate), the Contracting Officer shall refer the questions, including the views of all interested parties and the recommendation of the Contracting Officer, to the Administrator of the Wage and Hour Division for determination. The Administrator, or an authorized representative, will issue a determination within 30 days of receipt and so advise the Contracting Officer or will notify the Contracting Officer within the 30-day period that additional time is necessary.

The wage rate (including fringe benefits, where appropriate) determined pursuant to paragraphs (c)(2) and (c)(3) of this clause shall be paid to all workers performing work in the classification under this contract from the first day on which work is performed in the classification.

D. Whenever the minimum wage rate prescribed in the contract for a class of laborers or mechanics includes a fringe benefit which is not expressed as an hourly rate, the Contractor shall either pay the benefit as stated in the wage determination or shall pay another bona fide fringe benefit or an hourly cash equivalent thereof.

E. If the Contractor does not make payments to a trustee or other third person, the Contractor may consider as part of the wages of any laborer or mechanic the amount of any costs reasonably anticipated in providing bona fide fringe benefits under a plan or program; provided, That the Secretary of Labor has found, upon the written request of the Contractor, that the applicable standards of the Construction Wage Rate Requirements statute have been met. The Secretary of Labor may require the Contractor to set aside in a separate account assets for the meeting of obligations under the plan or program.

4. CONTRACT WORK HOURS AND SAFETY STANDARDS (from FAR 52.222-4)

The term “Contracting Officer” herein shall refer to the City of Colorado Springs Contracting Specialist assigned to this contract.

The term “Government” herein shall refer to the City of Colorado Springs and any interested federal or state entity.

A. Overtime requirements. No Contractor or subcontractor employing laborers or mechanics (see Federal Acquisition Regulation 22.300) shall require or permit them to work over 40 hours in any workweek unless they are paid at least 1 and 1/2 times the basic rate of pay for each hour worked over 40 hours.

B. Violation; liability for unpaid wages; liquidated damages. The responsible Contractor and subcontractor are liable for unpaid wages if they violate the terms in paragraph (a) of this clause. In addition, the Contractor and subcontractor are liable for liquidated damages payable to the Government. The Contracting Officer will assess liquidated damages at the rate of $10 per affected employee for each calendar day on which the employer required or permitted the employee to work in excess of the standard workweek of 40 hours without paying overtime wages required by the Contract Work Hours and Safety Standards statute (found at 40 U.S.C. chapter 37).

C. Withholding for unpaid wages and liquidated damages. The Contracting Officer will withhold from payments due under the contract sufficient funds required to satisfy any Contractor or subcontractor liabilities for unpaid wages and liquidated damages. If amounts withheld under the contract are insufficient to satisfy Contractor or subcontractor liabilities, the Contracting Officer will withhold payments from other Federal or federally assisted contracts held by the same Contractor that are subject to the Contract Work Hours and Safety Standards statute

D. Payrolls and basic records.

1. The Contractor and its subcontractors shall maintain payrolls and basic payroll records for all laborers and mechanics working on the contract during the contract and shall make them available to the Government until 3 years after contract completion. The records shall contain the name and address of each employee, social security number, labor classifications, hourly rates of wages paid, daily and weekly number of hours worked, deductions made, and actual wages paid. The records need not duplicate those required for construction work by Department of Labor regulations at 29 CFR 5.5(a)(3) implementing the Construction Wage Rate Requirements statute.

2. The Contractor and its subcontractors shall allow authorized representatives of the Contracting Officer or the Department of Labor to inspect, copy, or transcribe records maintained under paragraph (d)(1) of this clause. The Contractor or subcontractor also

shall allow authorized representatives of the Contracting Officer or Department of Labor to interview employees in the workplace during working hours.

E. Subcontracts. The Contractor shall insert the provisions set forth in paragraphs (a) through (d) of this clause in subcontracts that may require or involve the employment of laborers and mechanics and require subcontractors to include these provisions in any such lower tier subcontracts. The Contractor shall be responsible for compliance by any subcontractor or lower-tier subcontractor with the provisions set forth in paragraphs (a) through (d) of this clause.

5. CLEAN AIR ACT

By signing this Contract, the Contractor agrees to comply with all applicable standards, orders, or regulations issued pursuant to the Clean Air Act (42 U.S.C. 7401-7671q) and the Federal Water Pollution Control Act as amended (33 U.S.C. 1251-1387). Violations must be reported to the Federal awarding agency and the Regional Office of the Environmental Protection Agency (EPA). Further, the Contractor agrees to include this clause in all subcontracts in excess of $150,000.

6. DEBARMENT AND SUSPENSION

By signing this Contract, the Contractor certifies to the best of its knowledge and belief that it and its principals:

A. Are not presently debarred, suspended, proposed for debarment, declared ineligible, or voluntarily excluded from covered transactions by any Federal department or agency;

B. Have not within a three year period preceding this proposal been convicted of or had a civil judgment rendered against them for commission of fraud or a criminal offense in connection with obtaining, attempting to obtain, or performing a public (Federal, State, or local) transaction or contract under a public transaction; violation of Federal or State antitrust statutes or commission of embezzlement, theft, forgery, falsification or destruction of records, making false statements, or receiving stolen property;

C. Are not presently indicted for or otherwise criminally or civilly charged by a government entity (Federal, State, or local) with commission of any of the offenses enumerated in paragraph (1)(b) of this certification; and

D. Have not within a three-year period preceding this application/proposal had one or more public transactions (Federal, State, or local) terminated for cause or default.

7. BYRD ANTI-LOBBYING AMENDMENT

By signing this Contract, the Contractor certifies that it will not and has not used Federal appropriated funds to pay any person or organization for influencing or attempting to influence an officer or employee of any agency, a member of Congress, officer or employee of Congress, or an employee of a member of Congress in connection with obtaining any Federal contract, grant or any other award covered by 31 U.S.C. 1352. Further, the Contractor certifies that it has not engaged in lobbying with non-Federal funds

that takes place in connection with obtaining any Federal award. The Contractor must require the same certification from all subcontractors with subcontracts valued in excess of $100,000 under this Contract.

8. SMALL BUSINESS REQUIREMENTS

The Contractor must take all necessary affirmative steps to assure that minority businesses, women's business enterprises, and labor surplus area firms are used when possible.

Affirmative steps must include:

A. Placing qualified small and minority businesses and women's business enterprises on subcontract solicitation lists.

B. Assuring that small and minority businesses, and women's business enterprises are solicited whenever they are potential sources for subcontracting.

C. Dividing total requirements, when economically feasible, into smaller tasks or quantities to permit maximum participation by small and minority businesses, and women's business enterprises.

D. Establishing delivery schedules, where the requirement permits, which encourage participation by small and minority businesses, and women's business enterprises.

E. Using the services and assistance, as appropriate, of such organizations as the Small Business Administration and the Minority Business Development Agency of the Department of Commerce.

9. PROCUREMENT OF RECOVERED MATERIALS

The Contractor must comply with section 6002 of the Solid Waste Disposal Act, as amended by the Resource Conservation and Recovery Act. The requirements of Section 6002 include procuring only items designated in guidelines of the Environmental Protection Agency (EPA) at 40 CFR part 247 that contain the highest percentage of recovered materials practicable, consistent with maintaining a satisfactory level of competition, where the purchase price of the item exceeds $10,000 or the value of the quantity acquired by the preceding fiscal year exceeded $10,000; procuring solid waste management services in a manner that maximizes energy and resource recovery; and establishing an affirmative procurement program for procurement of recovered materials identified in the EPA guidelines.

10. ANTI-KICKBACK PROCEDURES

A. Definitions.

1. “Kickback,” as used in this clause, means any money, fee, commission, credit, gift, gratuity, thing of value, or compensation of any kind which is provided to any prime Contractor, prime Contractor employee, subcontractor, or subcontractor employee for the purpose of improperly obtaining or rewarding favorable treatment in connection with a prime contract or in connection with a subcontract relating to a prime contract.

2. “Person,” as used in this clause, means a corporation, partnership, business association of any kind, trust, joint-stock company, or individual.

3. “Prime contract,” as used in this clause, means a contract or contractual action entered into by the United States for the purpose of obtaining supplies, materials, equipment, or services of any kind.

4. “Prime Contractor” as used in this clause, means a person who has entered into a prime contract with the United States.

5. “Prime Contractor employee,” as used in this clause, means any officer, partner, employee, or agent of a prime Contractor.

6. “Subcontract,” as used in this clause, means a contract or contractual action entered into by a prime Contractor or subcontractor for the purpose of obtaining supplies, materials, equipment, or services of any kind under a prime contract.

7. “Subcontractor,” as used in this clause,

a. Means any person, other than the prime Contractor, who offers to furnish or furnishes any supplies, materials, equipment, or services of any kind under a prime contract or a subcontract entered into in connection with such prime contract, and

b. Includes any person who offers to furnish or furnishes general supplies to the prime Contractor or a higher tier subcontractor.

8. “Subcontractor employee,” as used in this clause, means any officer, partner, employee, or agent of a subcontractor.

B. The 41 U.S.C. chapter 87, Kickbacks, prohibits any person from --

1. Providing or attempting to provide or offering to provide any kickback;

2. Soliciting, accepting, or attempting to accept any kickback; or

3. Including, directly or indirectly, the amount of any kickback in the contract price charged by a prime Contractor to the United States or in the contract price charged by a subcontractor to a prime Contractor or higher tier subcontractor.

C. The Contractor shall have in place and follow reasonable procedures designed to prevent and detect possible violations described in paragraph (b) of this clause in its own operations and direct business relationships.

When the Contractor has reasonable grounds to believe that a violation described in paragraph (b) of this clause may have occurred, the Contractor shall promptly report in writing the possible violation. Such reports shall be made to the inspector general of the

contracting agency, the head of the contracting agency if the agency does not have an inspector general, or the Attorney General.

The Contractor shall cooperate fully with any Federal agency investigating a possible violation described in paragraph (b) of this clause.

The Contracting Officer may

1. offset the amount of the kickback against any monies owed by the United States under the prime contract and/or

2. direct that the Prime Contractor withhold from sums owed a subcontractor under the prime contract the amount of the kickback. The Contracting Officer may order that monies withheld under subdivision (c)(4)(ii) of this clause be paid over to the Government unless the Government has already offset those monies under subdivision (c)(4)(i) of this clause. In either case, the Prime Contractor shall notify the Contracting Officer when the monies are withheld.

The Contractor agrees to incorporate the substance of this clause, including subparagraph (c)(5) but excepting subparagraph (c)(1), in all subcontracts under this contract which exceed $150,000.

11. ENERGY EFFICIENCY IN ENERGY CONSUMING PRODUCTS

A. Definition. As used in this clause--

1. “Energy-efficient product”—

a. Means a product that—

i. Meets Department of Energy and Environmental Protection Agency criteria for use of the Energy Star trademark label; or

ii. Is in the upper 25 percent of efficiency for all similar products as designated by the Department of Energy’s Federal Energy Management Program.

2. The term “product” does not include any energy-consuming product or system designed or procured for combat or combat-related missions (42 U.S.C. 8259b).

B. The Contractor shall ensure that energy-consuming products are energy efficient products (i.e., ENERGY STAR® products or FEMP-designated products) at the time of contract award, for products that are—

1. Delivered.

2. Acquired by the Contractor for use in performing services at a Federally controlled facility.

3. Furnished by the Contractor for use by the Government.

4. Specified in the design of a building or work, or incorporated during its construction, renovation, or maintenance.

C. The requirements of paragraph (b) apply to the Contractor (including any subcontractor) unless:

1. The energy-consuming product is not listed in the ENERGY STAR® Program or FEMP; or

2. Otherwise approved in writing by the Contracting Officer.

D. Information about these products is available for—

1. ENERGY STAR® at http://www.energystar.gov/products; and

2. FEMP at http://www1.eere.energy.gov/femp/procurement/eep_requirements.html.

12. BUY AMERICAN—CONSTRUCTION MATERIALS

A. Definitions. As used in this clause—

1. "Commercially available off-the-shelf (COTS) item"—
a. Means any item of supply (including construction material) that is—
i. A commercial item (as defined in paragraph (1) of the definition at FAR 2.101);
ii. Sold in substantial quantities in the commercial marketplace; and
iii. Offered to the Government, under a contract or subcontract at any tier, without modification, in the same form in which it is sold in the commercial marketplace; and
b. Does not include bulk cargo, as defined in 46 U.S.C. 40102(4), such as agricultural products and petroleum products.

2. "Component" means an article, material, or supply incorporated directly into a construction material.

3. "Construction material" means an article, material, or supply brought to the construction site by the Contractor or a subcontractor for incorporation into the building or work. The term also includes an item brought to the site preassembled from articles, materials, or supplies. However, emergency life safety systems, such as emergency lighting, fire alarm, and audio evacuation systems, that are discrete systems incorporated into a public building or work and that are produced as complete systems, are evaluated as a single and distinct construction material regardless of when or how the individual parts or

components of those systems are delivered to the construction site. Materials purchased directly by the Government are supplies, not construction material.

4. “Cost of components” means—
a. For components purchased by the Contractor, the acquisition cost, including transportation costs to the place of incorporation into the construction material (whether or not such costs are paid to a domestic firm), and any applicable duty (whether or not a duty-free entry certificate is issued); or
b. For components manufactured by the Contractor, all costs associated with the manufacture of the component, including transportation costs as described in paragraph (1) of this definition, plus allocable overhead costs, but excluding profit. Cost of components does not include any costs associated with the manufacture of the construction material.

5. “Domestic construction material” means—
a. An unmanufactured construction material mined or produced in the United States;
b. A construction material manufactured in the United States, if—
i. The cost of its components mined, produced, or manufactured in the United States exceeds 50 percent of the cost of all its components. Components of foreign origin of the same class or kind for which nonavailability determinations have been made are treated as domestic.
b. The construction material is a COTS item.

6. “Foreign construction material” means a construction material other than a domestic construction material.

7. “United States” means the 50 States, the District of Columbia, and outlying areas.

a. Domestic preference.
i. This clause implements 41 U.S.C. chapter 83, Buy American, by providing a preference for domestic construction material. In accordance with 41 U.S.C. 1907, the component test of the Buy American statute is waived for construction material that is a COTS item. (See FAR 12.505(a)(2)). The Contractor shall use only domestic construction material in performing this contract, except as provided in paragraphs (b)(2) and (b)(3) of this clause.
ii. This requirement does not apply to information technology that is a commercial item or to the construction materials or components listed by the Government as follows:

b. The Contracting Officer may add other foreign construction material to the list in paragraph (b)(2) of this clause if the Government determines that—
i. The cost of domestic construction material would be unreasonable. The cost of a particular domestic construction material subject to the requirements of the Buy American statute is unreasonable when the cost of such material exceeds the cost of foreign material by more than 6 percent;
ii. The application of the restriction of the Buy American statute to a particular construction material would be impracticable or inconsistent with the public interest; or

iii.The construction material is not mined, produced, or manufactured in the United States in sufficient and reasonably available commercial quantities of a satisfactory quality.
8. Request for determination of inapplicability of the Buy American statute.

a. Any Contractor request to use foreign construction material in accordance with paragraph (b)(3) of this clause shall include adequate information for Government evaluation of the request, including—
i. A description of the foreign and domestic construction materials
ii. Unit of measure
iii. Quantity
iv. Price
v. Time of delivery or availability
vi. Location of the construction project
vii. Name and address of the proposed supplier
viii. A detailed justification of the reason for use of foreign construction materials cited in accordance with paragraph (b)(3) of this clause.
b. A request based on unreasonable cost shall include a reasonable survey of the market and a completed price comparison table in the format in paragraph (d) of this clause.
(iii) The price of construction material shall include all delivery costs to the construction site and any applicable duty (whether or not a duty-free certificate may be issued).
(iv) Any Contractor request for a determination submitted after contract award shall explain why the Contractor could not reasonably foresee the need for such determination and could not have requested the determination before contract award. If the Contractor does not submit a satisfactory explanation, the Contracting Officer need not make a determination.
(2) If the Government determines after contract award that an exception to the Buy American statute applies and the Contracting Officer and the Contractor negotiate adequate consideration, the Contracting Officer will modify the contract to allow use of the foreign construction material. However, when the basis for the exception is the unreasonable price of a domestic construction material, adequate consideration is not less than the differential established in paragraph (b)(3)(i) of this clause.
(3) Unless the Government determines that an exception to the Buy American statute applies, use of foreign construction material is noncompliant with the Buy American statute.
(d) Data. To permit evaluation of requests under paragraph (c) of this clause based on unreasonable cost, the Contractor shall include the following information and any applicable supporting data based on the survey of suppliers:

FOREIGN AND DOMESTIC CONSTRUCTION MATERIALS PRICE COMPARISON

Construction Material Description	Unit of Measure	Quantity	Price (Dollars)*
Item 1:			
Foreign construction material	_____	_____	_____
Domestic construction material	_____	_____	_____

Item 2:	_____	_____	_____
Foreign construction material	_____	_____	_____
Domestic construction material			

[List name, address, telephone number, and contact for suppliers surveyed. Attach copy of response; if oral, attach summary.]

[Include other applicable supporting information.]

[* Include all delivery costs to the construction site and any applicable duty (whether or not a duty-free entry certificate is issued).]

SCHEDULE G – CONSTRUCTION PLAN SET

FOLLOWS THIS PAGE

COMMERCIAL

2017 PPRBC

1313 E COSTILLA ST

Address: ~~1605 E PIKES PEAK AVE~~, COLORADO SPRINGS

Parcel: 6417400001

Plan Track #: 178506 **Received:** 06-Jul-2023 (JAY)

Description:

NEW COMMERCIAL BUILDING (~~UN~~CONDITIONED)

Contractor:

Code: 2015 IBC

Occupancy Class: U

Type of Construction: VB

Floor or # of stories: 1

Occupancy Load: 1

Fire Sprinkled for:
( ) Area ( ) Height ( ) Bsmt
( ) Occ/Use ( ) Other (X) N/A

Mixed Use: ( ) Acc. ( ) Separate ( ) N/Separate
(X) N/A ( ) Combined

Fire Wall ( ) Yes (X) No Largest Area _____

Horizontal Assembly: ( ) Structure ( ) Drop Clg (X) N/A
Alt. Fire Hazm/HP

Fire:

_____ _____

Required PPRBD Departments (7)

Enumeration
Released for Permit
09/21/2023 11:51:29 AM
Pikes Peak REGIONAL Building Department
Becky A
ENUMERATION

Floodplain
N/A
07/11/2023 11:34:29 AM
Pikes Peak REGIONAL Building Department
Becky A
FLOODPLAIN

Construction
Released for Permit
10/06/2023 9:01:53 AM
Pikes Peak REGIONAL Building Department
Christineh
CONSTRUCTION

Elevators
N/A
08/01/2023 3:05:24 PM
Pikes Peak REGIONAL Building Department
robertv
ELEVATOR

Electrical
Released for Permit
08/01/2023 4:53:43 PM
Pikes Peak REGIONAL Building Department
shelby
ELECTRICAL

Mechanical
Released for Permit
09/22/2023 10:54:22 AM
Pikes Peak REGIONAL Building Department
JustinC
MECHANICAL

Release of this plan does not preclude compliance with all applicable codes, ordinances and other pertinent regulations. This plan set must be present on the job site for every inspection.

Required PPRBD Departments -- CONT

Plumbing
Released for Permit
10/06/2023 11:38:39 AM
shanen
PLUMBING

Required Outside Departments (9)

CSU Contract Admin.
APPROVED
09/06/2023 9:01:05 AM
czani
Colorado Springs Utilities
Contract Admin.

CO Springs DRE
APPROVED
08/03/2023 8:31:58 AM
Austin.Cooper
City Development Review

CO Springs Fire
APPROVED
09/30/2023 12:10:56 PM
FDRTP
Colorado Springs Fire Department
2023-1070-CN-1

CO Springs Hazmat
N/A
08/07/2023 1:33:12 PM
FDDEM
Colorado Springs Hazmat

City Engr
APPROVED
09/22/2023 1:35:17 PM
jdagnillo
Engineering Development Review

Gas/Elec. Utils
APPROVED
10/06/2023 11:19:56 AM
smanning
Gas/Electric

Required Outside Departments -- CONT

CSU Waste Water

APPROVED

02/16/2024 12:53:17 PM

mgackle

Colorado Springs Utilities

It's how we're all connected

Wastewater

CSU Water

APPROVED

02/16/2024 12:53:10 PM

mgackle

Colorado Springs Utilities

It's how we're all connected

Water

Health Dept.

N/A

08/04/2023 11:55:28 AM

El Paso County, CO

heafurno

Public Health

Health Department

Pikes Peak REGIONAL Building Department

CODE STUDY FORM

2017 PIKES PEAK REGIONAL BUILDING COD

Released for Permit 09/21/2023 9:54 AM Pikes Peak REGIONAL Building Department Beverly A ENUMERATION

SECTION 1.0

This form is intended to be completed using a PDF reader and must be stamped by the design professional of record. This form must be included as an attachment, or as part of the second page of the plans for all commercial projects. All information must be provided.

Address: 1313 E Costilla Street City: Colorado Springs Zip: 80910

Tax Schedule Number:(1) 6417400001

Legal Description:(1) PARTS OF NE4 SEC 17-14-66, SE4 SEC 17-14-66, NE4 SEC 20-14-66-INCLUDES LOTS 1,2 BLK 1 LAKE FRONT ADD-

ZONING DISTRICT: (1) CITY OF COLORADO SPRINGS

FIRE JURISDICTION: (1) COLORADO SPRINGS **IF OTHER, SPECIFY**

(1) *This information may be found HERE*

SCOPE OF PROJECT:

PHASED PROJECTS:

☐ Foundation Only ☐ Superstructure ☐ Core/Shell ☐ Finish

Released for Permit 10/06/2023 9:02:00 AM Pikes Peak REGIONAL Building Department Christineh CONSTRUCTION

REGULAR PROJECTS:

☐ Interior Remodel ☐ Interior Finish ☐ Addition ☒ Complete Building

☐ Change of Occupancy ☐ Other

SUMMARIZED DESCRIPTION OF WORK:

This project is to construct a small maintenance building within the park to house an aeration system for prospect lake, the building will not be occupied except for maintenance of the equipment.

PRINCIPAL USE OF BUILDING: Group U - Housing for aeration equipment.

TYPE OF CONSTRUCTION: *(International Building Code)*

☐ I-A ☐ II-A ☐ III-A ☐ IV-A ☐ IV-C ☐ V-A

☐ I-B ☐ II-B ☐ III-B ☐ IV-B ☐ IV-HT ☒ V-B

BUILDING HEIGHTS AND AREAS*:

Total Building Area:	264	Ft^2	Existing Building Area:	0	Ft^2
First Floor:	264	Ft^2	New Building Area:	264	Ft^2
Second Floor:		Ft^2	Total Height:	13'-2"	Ft
Third Floor:		Ft^2	Number of Stories:	1	
Fourth Floor:		Ft^2	Basement Area:	0	Ft^2
Fifth Floor:		Ft^2	Number of Mezzanines:	0	
Sixth Floor:		Ft^2	Mezzanine Area:		Ft^2
Seventh Floor:		Ft^2	Unlimited Area Buildings:	CHOOSE UNLIMITED AREA PROVISION	

TOTAL AREA FOR SCOPE OF WORK: 264 **Ft^2**

Provide per floor details, height increase (IBC 504), and area increase (IBC 506) calculations on plans if applicable.* ***If additional stories are required, provide an additional sheet.*

COMPLETION OF THIS FORM DOES NOT TAKE THE PLACE OF REQUIRED CODE DATA ON THE PLAN SET

CODE STUDY FORM

SECTION 2.0

OCCUPANCIES: *Specify all occupancies that apply and indicate the square footage of each*

U	264	Ft^2	CHOOSE OCCUPANCY		Ft^2
CHOOSE OCCUPANCY		Ft^2	CHOOSE OCCUPANCY		Ft^2
CHOOSE OCCUPANCY		Ft^2	CHOOSE OCCUPANCY		Ft^2

SPECIAL USE AND OCCUPANCIES ☐ ***YES*** ☒ ***NO***

CHOOSE SPECIAL USE AND OCCUPANCIES (if applicable)

List all, if more than one applies:

SEPARATION OF OCCUPANCIES:

☐ Nonseparated Occupancies ☐ Separated Occupancies ☒ No Mixed Occupancies

If Nonseparated Occupancies, specify worst case occupancy:

INCIDENTAL USE AREAS: *List any incidental use areas and separation requirements.*

Use:		Separation:		Hrs
Use:		Separation:		Hrs
Use:		Separation:		Hrs

Released for Permit
10/06/2023 9:02:02 AM
Pima Pima REGIONAL Building Department
Christineh
CONSTRUCTION

ACCESSORY OCCUPANCY AREAS: *Maximum allowed is 10%*

Accessory Occupancy:		Accessory Area:		Ft^2
Accessory Occupancy:		Accessory Area:		Ft^2
Accessory Occupancy:		Accessory Area:		Ft^2

FIRE SPRINKLER SYSTEM: ☒ Non-Sprinklered ☐ Sprinklered CHOOSE REASON FOR SPRINKLER SYSTEM

CLASSIFICATION OF FIRE SPRINKLER SYSTEM: CHOOSE CLASSIFICATION OF SPRINKLER SYSTEM

FIRE ALARM SYSTEM: ☒ Not Required ☐ Required CHOOSE ALARM SYSTEM TYPE

MEANS OF EGRESS: *For scope of work*

Exits Required:	1		Exits Provided:	1	
Occupant Load:	1		Number of Interior Exit Stairways:	0	
Actual Max. Travel Distance:	26'	Ft	Interior Exit Stairway Rating:		Hrs
Actual Common Path of Travel:	26'	Ft	Number of Fire Walls:	0	
Corridor Rating:		Hrs.	Fire Wall Rating:		Hrs

SHAFTS: *If this building contains rated shafts, specify required shaft support*

Shaft Construction Rating: Hrs Supporting Construction Rating: Hrs

RATED HORIZONTAL ASSEMBLIES: *Location, if applicable* ☐ Structure ☐ Dropped Ceiling

CODE STUDY FORM

SECTION 3.0

Colorado Licensed Design

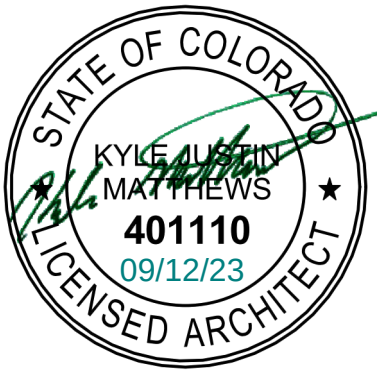

Professional Stamp

Released for Permit
10/06/2023 9:02:04 AM
Pikes Peak REGIONAL Building Department
Christineh
CONSTRUCTION

As the design professional of record, I certify this information is correct to the best of my knowledge. I further acknowledge my stamp pertains to Sections 1.0 and 2.0 only.

Signature 2-17-23 *Date*

Was a formal Pre-Submittal Consultation with Pikes Peak Regional Building Department performed for this project? YES ☐ NO ☒

With whom:_____

Is this project designated as official RAPID RESPONSE? YES ☐ NO ☐

If so, please attach the RAPID RESPONSE CERTIFICATE to this form prior to submittal.

CONTACT INFORMATION:

Project Contact Name	Kyle Matthews
Email address:	kyle@justarchitectureanddesign.com
Phone Number:	720-323-1493
Fax Number:	

CODE STUDY FORM

SECTION 4.0

	Yes	No
Does the scope of work involve a change of occupancy classification? If yes, what was the most recent existing use? _____ Proposed use? _____		X
Will marijuana be cultivated, processed or dispensed at this location? If yes, mark all activities that will apply: ☐ Dispensary ☐ Cultivation ☐ Processing ☐ Extraction** **Extraction activities will require this form: http://www.springsgov.com/SIB/files/2015%20HO%20Submission%20Certification%20Form(5).pdf		X
If applicable, is the **approved** Development Plan included with this submittal?		
Does this project disturb 1 or more acres, or have construction activities that are a part of a larger common plan of development or sale? If yes, a City of Colorado Springs, Stormwater Enterprise Division, Grading and Erosion Control Permit and plan is required https://coloradosprings.gov/stormwater-enterprise/page/grading-and-erosion-control-permit?mlid=6156		X
Is this permit for the purposes of finishing an existing core and shell permit (first time finish of the space)?		X
Is this a food establishment (equipment locations must be shown on plans)?		X
Does the scope of work include a swimming pool?		X
Does the scope of work have venting equipment (hoods, catalytic oxidizers, scrubbers)?		X
If applicable, are the approved civil construction drawings (including utility service plan) included in submittal?	X	
Will there be any new utility meters or changes to existing meters? If yes, which are affected (check): ☐ **Gas** ☒ **Electric** ☐ **Water** Gas: Existing load _____ Proposed load _____ Electric: Existing load _____ Proposed load 83 amps or 29.9 kW Water: Existing load _____ Proposed load _____ Note: Commercial Water Meter Sizing Form required if any changes to water meter or significant fixture count changes are proposed	X	
Will vehicle maintenance or vehicle storage (parking garage) activities occur? If yes, state square footage of area this will occur: _____		X
Will Electric Vehicle (EV) charging stations be installed? If yes, specify location and level (1, 2, or 3): _____		X
Is a sand/oil or grease interceptor proposed? If yes, state size: _____		X
Is an internal grease trap proposed? *If yes, contact CSU at FOG@csu.org to discuss a variance*		X
Is there a backflow prevention device indicated (hose bib locations must be shown on plan)?		X
Per IFC Chapter 50, does the scope of work include any hazardous materials? If the project is located within the City of Colorado Springs, attach a Hazardous Material Inventory Statement (HMIS) - available at https://coloradosprings.gov/hazmat?mlid=42381 **If the project is outside the City of Colorado Springs, contact the appropriate Fire Jurisdiction**		X
Per IFC Chapter 32, does the scope of work involve the stacking of commodities higher than 12' or high hazard commodities higher than 6' AFF? If the project is located within the City of Colorado Springs, attach a High Pile Storage Questionnaire form– available at https://coloradosprings.gov/sites/default/files/inline-images/2015_ifc_hps_questionnaire.pdf **If the project is outside the City of Colorado Springs, contact the appropriate Fire Jurisdiction**		X
Per IFC 905, does the scope of work require fire protection standpipes? If yes, indicate reason and cite code reference: _____		X
Per IBC 904, does the scope of work or building require a fixed fire protection system?		X
Per IBC 909, does the scope of work include a smoke control system? If yes, indicate type (check): ☐ **Passive** ☐ **Active**		X
Does the scope of the work include a childcare facility?		X
Does the scope of the work include a Body Art (tattoo, piercing, etc.) facility?		X
Specify total earthmoving area of project in square feet: _____		
Will the disturbance be at least 1 acre, but less than 25 acres of land, and the disturbance period will be 6 months or less? If yes, submit a construction Activity Permit Application to EPC Public Health: http://www.elpasocountyhealth.org/service/air-quality/construction-activity-application.		X
Will the disturbance be 25 or more acres of land, or the disturbance period will exceed 6 months? If yes, submit an Air Pollution Emission Notice to the Colorado Department of Public Health and Environment: https://www.colorado.gov/pacific/cdphe/air/apens-and-permits		X

EcoResource
SOLUTIONS

5765 Olde Wadsworth Blvd., Ste. 10
Arvada, CO 80002

Voice: (720) 974-4075

www.EcoResourceSolutions.com
office@EcoResoureSolutions.com

June 29, 2023

RE: **Development Plan – Prospect Lake Aeration System Shed (Memorial Park, Colorado Springs)**

To Whom It May Concern:

Our company (with engineers) has completed a lake aeration system design for Prospect Lake (Memorial Park) for the City of Colorado Springs. Part of this design is to construct a shed near the lake's shore to house air compressors and components).

The development plan for the Prospect Lake aeration system shed is still being completed by the City of Colorado Springs. All other plans and drawings have been submitted to Pikes Peak Regional Building Department. I was informed that the City is on a fast-track to complete the development plan.

Again, we have submitted all other plans, and this was completed to meet the code change deadline for June 29th. Upon completion of the development plan by the City, we will immediately submit such.

For further questions, please contact the City's project manager for this project:

Erik Rodriguez
City of Colorado Springs
Environmental, Health, and Safety Specialist
Parks, Recreation, and Cultural Services
Phone: 719-385-6512
Cell: 719-377-0692

For other questions, please feel free to contact me.

Respectfully,

APPROVED
08/03/2023 8:31:50 AM
Austin.Cooper
COLORADO SPRINGS
OLYMPIC CITY USA
City Development Review

Anthony Byrne
President

PROSPECT LAKE PUMPHOUSE

1315 E COSTILLA STREET
COLORADO SPRINGS, CO 80910

LEGEND

SD	STORM DRAINAGE
W	WATER SERVICE
G	GAS
S	SANITARY SEWER
E	POWER ELECTRICAL
	DITCH / FLOWLINE
	GRADING LIMIT
	GRADE SLOPE
	PROPERTY LINE
	CENTERLINE
	SAWCUT

SITE MAP

UTILITY PURVEYORS

ELECTRICITY: COLORADO SPRINGS UTILITIES
1521 SOUTH HANCOCK EXPRESSWAY
COLORADO SPRINGS, CO 80903
719-668-8259

WATER: COLORADO SPRINGS UTILITIES
1521 SOUTH HANCOCK EXPRESSWAY
COLORADO SPRINGS, CO 80903
719-668-8259

SHEET INDEX

C-0.1	TITLE SHEET
C-0.2	NOTES SHEET
C-3.1	SITE UTILITY PLAN
C-4.1	DETAIL SHEET

DIG ALERT

DIGALERT
DIAL TOLL FREE
811 OR
(1-800-422-4133)
AT LEAST TWO DAYS
BEFORE YOU DIG
UNDERGROUND SERVICE ALERT

PRIOR TO COMMENCING OF ANY EXCAVATION, DIGGING, POT HOLING, ETC. CALL DIG ALERT FOR ASSIGNMENT OF AN INQUIRY ID NUMBER, BECAUSE NO EARTH WORK SHALL COMMENCE UNLESS THE CONTRACTOR HAS OBTAINED THIS AND EACH UTILITY OR OWNER OF SUBSURFACE FACILITIES HAS LOCATED AND MARKED THEIR SUBSURFACE FACILITIES IN THE AREA OF WORK.

STANDARD ABBREVIATIONS

AC	ASPHALTIC CONCRETE	IE	INVERT ELEVATION
BLDG	BUILDING	INV	INVERT
BCR	BEGIN CURB RETURN	LA	LANDSCAPE AREA
BVC	BEGIN VERTICAL CURVE	NG	NATURAL GRADE
BW	BOTTOM OF WALL	PA	PLANTER AREA
CB	CATCH BASIN	PCC	PORTLAND CEMENT CONCRETE
C/L	CENTERLINE	P/L	PROPERTY LINE
CMU	CONCRETE MASONRY UNIT	POC	POINT OF CONNECTION
CONC	CONCRETE	PS	PARKING STRIPE
DW	DRIVEWAY	PVC	POLYVINYL CHLORIDE
ECR	END CURB RETURN	RW	RIGHT OF WAY
EG	EXISTING GRADE	SD	STORM DRAIN
EP	EDGE OF PAVEMENT	SG	SUB-GRADE ELEVATION
EVC	END VERTICAL CURVE	SS	SANITARY SEWER
FF	FINISHED FLOOR	TC	TOP OF CURB, CONCRETE
FG	FINISHED GRADE	TF	TOP OF FOOTING
FH	FIRE HYDRANT	TG	TOP OF GRATE
FL	FLOW LINE	TW	TOP OF WALL
FS	FINISHED SURFACE	VC	VERTICAL CURVE
GB	GRADE BREAK		

VICINITY MAP

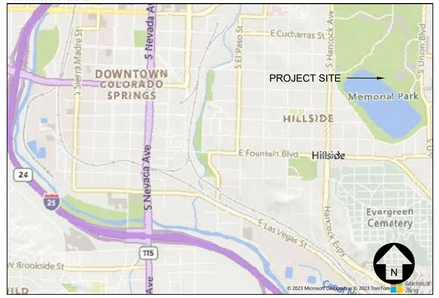

SURVEY NOTES

EXISTING TOPOGRAPHIC AND BOUNDARY INFORMATION SHOWN HEREON PER SURVEY BY APEX LAND SURVEYING AND MAPPING, LLC DATED DECEMBER 18, 2023.

BENCHMARK: SET NO. 4 REBAR AS SHOWN HEREON. ELEVATION= 6088.71' (ASSUMED).

SURVEY MONUMENT PROTECTION:

PROTECT AND PRESERVE, IN PLACE, ALL SURVEY MONUMENTS AND BENCHMARKS. DO NOT DISTURB, MOVE, OR RELOCATE MONUMENTS OR BENCHMARKS WITHOUT THE PRIOR REVIEW AND APPROVAL BY THE AGENCY HAVING JURISDICTION OVER THE MONUMENT OR BENCHMARK. THE CONTRACTOR SHALL CONTRACT WITH A LICENSED SURVEYOR FOR MONUMENTS REQUIRING DISTURBANCE OR REMOVAL, AND THE SURVEYOR SHALL RESET THE MONUMENTS OR PROVIDE PERMANENT WITNESS MONUMENTS AND FILE THE REQUIRED DOCUMENTATION WITH THE AUTHORITY HAVING JURISDICTION, PURSUANT TO ALL APPLICABLE BUSINESS AND PROFESSIONAL CODES.

GRADING INFORMATION

CUT QUANTITY: 0 CUBIC YARDS
FILL QUANTITY: 20 CUBIC YARDS
NET QUANTITY: 20 CUBIC YARDS IMPORT

*NOTE: THE ABOVE QUANTITIES ARE FOR PLANNING AND PERMITTING PURPOSES ONLY. SHRINKAGE; CONSOLIDATION AND SUBSIDENCE FACTORS; LOSSES DUE TO CLEARING AND DEMOLITION OPERATIONS; AND TRENCHING FOR UTILITIES AND FOUNDATIONS ARE NOT INCLUDED. ESTIMATED EARTHWORK QUANTITIES ARE BASED ON THE APPROXIMATE DIFFERENCE BETWEEN EXISTING GRADES AND PROPOSED FINISHED GRADES OR PAVEMENT SUBGRADES, AS INDICATED ON THE PLANS, AND SHOULD VARY ACCORDING TO THESE FACTORS AND LOSSES. THE CONTRACTOR SHALL PERFORM AN EARTHWORK ESTIMATE FOR THE PURPOSE OF PREPARING A LUMP SUM BID PRICE FOR EARTHWORK. THE BID PRICE SHALL INCLUDE COSTS FOR ANY NECESSARY IMPORT AND PLACEMENT OF EARTH MATERIALS OR THE EXPORT AND PROPER DISPOSAL OF EXCESS EARTH MATERIALS.

OWNER/DEVELOPER PLAN APPROVAL

THE UNDERSIGNED OWNER/DEVELOPER AGREES THAT THEY SHALL, AT THEIR EXPENSE, BE SOLELY RESPONSIBLE FOR 1) THE INSTALLATION OF THE PROPOSED UTILITY INFRASTRUCTURE IN ACCORDANCE WITH THESE PLANS, AND 2) ALL DAMAGES AND DEFECTS ARISING FROM, OR RELATED TO, THE INSTALLATION, MAINTENANCE OR OPERATION OF THE PUBLIC UTILITY INFRASTRUCTURE FROM THE DATE OF PRELIMINARY ACCEPTANCE FOR A PERIOD OF TWO YEARS, OR UNTIL FINAL ACCEPTANCE, WHICHEVER IS LATER.

THE UNDERSIGNED UNDERSTANDS THAT ALL PRIVATE UTILITY INFRASTRUCTURE, AS INDICATED ON THESE PLANS, SHALL REMAIN THE PROPERTY OF THE OWNER AND SHALL BE MAINTAINED BY THE OWNER, AS REQUIRED BY *COLORADO SPRINGS UTILITIES' LINE EXTENSION AND SERVICE STANDARDS.*

☐ **PUBLIC WATER MAIN PROPOSED** ☐ **PUBLIC WASTEWATER MAIN PROPOSED** ☒ **PRIVATE WATER SERVICE LINE (<4") AND/OR PRIVATE WASTEWATER SERVICE LINE (<8")**
☐ **PRIVATE WATER MAIN PROPOSED** ☐ **PRIVATE WASTEWATER MAIN PROPOSED**

SIGNED: Erik Rodriguez — OWNER/DEVELOPER
Erik Rodriguez — OWNER/DEVELOPER (PRINT NAME)
DATE: 2/9/2024

DBA: City of Colorado Springs Parks Recreation and Cultural Services
ADDRESS: 1401 Recreation Way
Colorado Springs, CO 80905
PHONE: 719-385-6512
EMAIL: Erik.Rodriguez@coloradosprings.gov

FIMS MAP NUMBER: I-35
TAX SCHEDULE NO.: 6417400001
PRESSURE ZONE: HIGHLINE
STATIC PRESSURE AT MDD: NA
UTILITY DESIGN CAD FILE NO.:
UAP FILE NO: NA
DEVELOPMENT PLAN NO.: NA
APPROVAL DATE: NA
PLAT REC. NO.: NA
PUBLIC UTILITY EASEMENT REC. NO:
NOTICE OF PRIVATE WASTEWATER SYSTEM REC. NO.:
NOTICE OF PRIVATE WATER SYSTEM REC. NO.:

COLORADO SPRINGS UTILITIES
COMMERCIAL UTILITY SERVICE DESIGN APPROVAL

APPROVED
02/16/2024 9:23:03 AM
malcuran
Utility Service
Colorado Springs Utilities
It's how we're all connected

PROJECT NUMBER: 2024-C1002
CSU SHEET 1 OF 4

APPROVAL EXPIRES ONE (1) YEAR FROM THE DATE ABOVE AND RESUBMITTAL OF THESE PLANS FOR REVIEW AND APPROVAL IS REQUIRED IF CONSTRUCTION DOES NOT BEGIN DURING THIS PERIOD.

Plan Prepared By:
Ashley&Vance ENGINEERING, INC.
9555 Ralston Road, Suite 201
Arvada, CO 80004
(303) 755-0762
www.ashleyvance.com
CIVIL • STRUCTURAL

The use of these plans and specifications shall be restricted to the original site for which they were prepared and publication thereof is expressly limited to such use. Reproduction or publication by any method, in whole or in part, is prohibited. Title to these plans and specifications remain with Ashley & Vance Engineering, Inc. without prejudice. Visual contact with these plans and specifications shall constitute prima facie evidence of the acceptance of these restrictions.

Engineer of Record:

COLORADO LICENSED
CORY R. QUINTANA
25996
PROFESSIONAL ENGINEER

PROSPECT LAKE PUMPHOUSE
1315 E COSTILLA STREET
COLORADO SPRINGS, CO 80910

Revisions:
1 .
2 .
3 .
4 .
5 .

Project Engineer: BRJ		Ext: 121	
Project Manager: BRJ			
Date: 2.06.2024		Scale: PER PLAN	
AV Job No: 221742		Sheet Size: 24" x 36"	

TITLE SHEET

C-0.1

C:\Users\Bruce\AppData\Local\Temp\AcPublish_27304\C-0 TITLE SHEET.dwg, C-0.1, Feb 06, 2024 11:51am, Bruce

UTILITY SERVICE PLAN NOTES

THE CONTRACTOR SHALL NOTIFY COLORADO SPRINGS UTILITIES' INSPECTIONS OFFICE 719–668–4658 A MINIMUM OF 48 HOURS PRIOR TO THE START OF CONSTRUCTION.

GENERAL:

1. ALL CONSTRUCTION METHODS AND MATERIALS SHALL MEET *COLORADO SPRINGS UTILITIES' WASTEWATER AND WATER LINE EXTENSION AND SERVICE STANDARDS (WATER/WASTEWATER LESS).*
2. COLORADO SPRINGS UTILITIES DOES NOT GUARANTEE THE ACCURACY OF LOCATIONS OF EXISTING PIPELINES, MANHOLES, HYDRANTS, VALVES AND SERVICE LINES. IF FIELD CONDITIONS ARE FOUND TO BE DIFFERENT THAN SHOWN ON THE PLANS, THE CONTRACTOR SHALL NOTIFY THE INSPECTOR AND THE DESIGN ENGINEER IMMEDIATELY.
3. THE CONTRACTOR IS RESPONSIBLE FOR ANY DAMAGE TO ANY UTILITY FACILITIES AS A RESULT OF HIS ACTIONS. THE CONTRACTOR SHALL MAKE ALL THE REQUIRED REPAIRS IMMEDIATELY TO THE SATISFACTION OF COLORADO SPRINGS UTILITIES.
4. ALL FIELD STAKING SHALL COMPLY WITH THE *WATER/WASTEWATER LESS.*
5. CORROSION PROTECTION MEASURES SHALL COMPLY WITH THE *WATER/WASTEWATER LESS.*
6. FINAL LOCATION OF ALL WASTEWATER AND WATER SERVICES SHALL BE APPROVED IN THE FIELD BY THE COLORADO SPRINGS UTILITIES INSPECTOR.
7. ALL TRENCH BACKFILL AND COMPACTION SHALL BE IN ACCORDANCE WITH SECTION 206 OF THE *CITY OF COLORADO SPRINGS STANDARD SPECIFICATIONS MANUAL AND SECTION 5.18 OF THE WATER LESS.*

WASTEWATER:

1. SERVICE STUBS SHALL BE INSTALLED A MINIMUM OF SEVEN FEET (7') INTO THE PROPERTY, UNLESS OTHERWISE SHOWN, AND THE END OF THE STUB SHALL BE MARKED WITH A 2"X4"X12' STEEL OR WOODEN POST.
2. SERVICES SHALL BE CONNECTED A MINIMUM OF FIVE FEET (5') FROM THE OUTSIDE EDGE OF ANY MANHOLE ON THE MAIN LINE AND SHALL MAINTAIN TWO FEET (2') OF SEPARATION BETWEEN TAPS CENTER TO CENTER.
3. ALL CLEANOUTS SHALL BE THE SAME SIZE AS THE SERVICE LINE.
4. THE CONTRACTOR SHALL NOTIFY EL PASO COUNTY DEPARTMENT OF HEALTH AND ENVIRONMENT WHEN ANY SEPTIC TANK IS TO BE ABANDONED AND PAY ALL FEES NECESSARY TO OBTAIN A PERMIT.

WATER:

1. SERVICE STUBS SHALL BE INSTALLED WITH THE CURB STOP AT OR NEAR PROPERTY LINE AND SHALL NOT BE INSTALLED WITHIN DRIVEWAYS OR SIDEWALKS (SEE DETAIL DRAWING B2–3).
2. SERVICE TAPS SHALL BE MADE A MINIMUM OF THREE FEET (3') FROM THE BELL OR APPURTENANCE ON THE WATER MAIN. TAPS SHALL BE A MINIMUM OF THREE FEET (3') APART ON THE SAME SIDE OF THE WATER MAIN AND A MINIMUM OF ONE–AND–A–HALF FEET (1.5') WHEN TAPS ARE MADE ON OPPOSITE SIDES OF THE WATER MAIN.
3. ALL SERVICES FOR COMMERCIAL USE AND SOME RESIDENTIAL USES REQUIRE INSTALLATION OF A BACKFLOW PREVENTION ASSEMBLY IMMEDIATELY AFTER THE METER. THE BACKFLOW PREVENTION ASSEMBLY SHALL BE APPROVED BY THE FOUNDATION FOR CROSS–CONNECTION CONTROL AND HYDRAULIC RESEARCH OF THE UNIVERSITY OF SOUTHERN CALIFORNIA (USC–FCCCHR) AND INSTALLED IN ACCORDANCE WITH THIS LISTING. PLEASE REFERENCE THE WATER LINE EXTENSION STANDARDS FOR ADDITIONAL REQUIREMENTS.
4. ALL TAPS ON COLORADO SPRINGS UTILITIES WATER MAINS SHALL BE PERFORMED BY COLORADO SPRINGS UTILITIES. ALL OTHER TAPS SHALL BE PERFORMED BY THE CONTRACTOR.
5. ANY ABANDONED SERVICES MUST BE PHYSICALLY DISCONNECTED AT THE MAIN. ANY NECESSARY REPAIRS TO THE MAIN AND/OR SHUT DOWN OF THE TAPPING VALVE SHALL BE AS DIRECTED BY COLORADO SPRINGS UTILITIES.
6. (1.) ALL WATER SERVICE LINES SHOULD ENTER THE BUILDING WITHIN 5 FEET OF AN EXTERIOR WALL. EXPOSED WATER PLUMBING SHALL BE MINIMIZED INSIDE THE BUILDING PRIOR TO THE WATER METER AND/OR APPROVED BACKFLOW PREVENTION ASSEMBLY OR METHOD.
7. (2.) ALL HDPE WATER SERVICE LINES MUST EXTEND A MINIMUM OF 6 INCHES ABOVE THE FLOOR AND BE 90 DEGREES FROM THE FLOOR PLAN TO ALLOW FOR BRACING AND TRANSITION TO THE METER LOOP ASSEMBLY.

3.

4.

GENERAL NOTES:

1. ALL CONSTRUCTION SHALL BE IN ACCORDANCE WITH THE 2017 PIKES PEAK REGIONAL BUILDING CODE AND THE CURRENT EDITION OF THE INTERNATIONAL BUILDING CODE.
2. IN THE EVENT OF A CONFLICT BETWEEN ANY REFERENCED STANDARD, THE MORE STRINGENT REQUIREMENT SHALL GOVERN.
3. A COPY OF THESE APPROVED PLANS MUST BE ON THE JOB SITE WHENEVER CONSTRUCTION IS IN PROGRESS.
4. BEFORE BEGINNING WORK, CONTRACTOR SHALL CONFIRM WITH AGENCIES HAVING JURISDICTION THAT ALL REQUIRED PERMITS AND LICENSES HAVE BEEN OBTAINED AND ALL REQUIRED NOTICES GIVEN.
5. UNDERGROUND AND OVERHEAD CONSTRUCTION IN ADDITION TO WHAT IS SHOWN ON THESE PLANS MAY BE PART OF THIS PROJECT, INCLUDING ARCHITECTURAL AND LANDSCAPE ARCHITECTURAL IMPROVEMENTS. ADDITIONAL PERMITS MAY BE REQUIRED.
   A. CONTRACTOR SHALL BE RESPONSIBLE FOR COORDINATING WORK AND INTERFACING IMPROVEMENTS WITH WORK BY OTHER CONTRACTORS AT THIS JOB SITE AND WITH IMPROVEMENTS REQUIRED BY PLANS BY OTHERS.
   B. CONTRACTOR SHALL REFER TO ARCHITECTURAL PLANS FOR BUILDING AND SITE LAYOUT DIMENSIONING.
   C. CONTRACTOR SHALL REFER TO ARCHITECTURAL AND LANDSCAPE ARCHITECTURAL PLANS AND SPECIFICATIONS FOR SITE DEVELOPMENT CONSTRUCTION DETAILS AND DIMENSIONING, INCLUDING THOSE FOR BUILDINGS, PATIOS, WALKWAYS, DRIVEWAYS, WALLS/FENCES, PLUMBING, ELECTRICAL, UTILITIES, LANDSCAPING, AND IRRIGATION.
7. ALL SITE WORK AND TESTING SHALL BE DONE IN CONFORMANCE WITH THE RECOMMENDATIONS CONTAINED IN THE FOLLOWING GEOTECHNICAL ENGINEERING REPORT FOR THIS PROJECT:
   A. PREPARED BY: TERRACON CONSULTANTS, PROJECT NO. 23225015, DATED APRIL 21, 2022.
   B. THIS REPORT AND ANY ADDENDA SHALL BE INCORPORATED INTO THESE PLANS AND MADE A PART HEREOF AS IF SPELLED OUT IN THEIR ENTIRETY HEREON. IT IS THE CONTRACTOR'S RESPONSIBILITY TO REVIEW THE APPLICABLE GEOTECHNICAL REPORTS. CONTRACTOR SHALL CONTACT THE GEOTECHNICAL ENGINEER TO OBTAIN OR REVIEW COPIES OF THESE REPORTS AND ADDENDA.
   C. PRIOR TO BIDDING, CONTRACTOR SHALL CONTACT THE GEOTECHNICAL ENGINEER TO DETERMINE THE LOCATION AND DEPTH OF ALL TEST BORINGS AND EXPLORATORY PITS AND EXCAVATIONS. CONTRACTOR SHALL DETERMINE FROM THE GEOTECHNICAL ENGINEER WHAT REMEDIAL WORK IS RECOMMENDED TO MAKE THESE DISTURBED LOCATIONS SUITABLE FOR THE PROPOSED IMPROVEMENTS. CONTRACTOR SHALL INCLUDE IN HIS BID ALL COSTS FOR THE RECOMMENDED REMEDIAL WORK AND SHALL ADJUST HIS OPERATIONS TO PROPERLY SEQUENCE THE WORK TO ACCOMMODATE REMEDIAL WORK WITH CONSTRUCTION OF PROPOSED IMPROVEMENTS.
8. ALL MATERIALS AND CONSTRUCTION SHALL BE IN ACCORDANCE WITH APPLICABLE HEALTH AND SAFETY LAWS, ORDINANCES, REGULATIONS, RULES, AND STANDARDS INCLUDING ALL REQUIREMENTS OF COLORADO DEPARTMENT OF PUBLIC HEALTH & ENVIRONMENT AND OSHA.
9. ALL UNSUITABLE CONSTRUCTION MATERIALS AND RUBBISH AND DEBRIS SHALL BE REMOVED FROM THE JOB SITE; TRANSPORTED TO A SUITABLE LOCATION, AND DISPOSED OF IN A PROPER AND LEGAL MANNER.
10. ALL WORK INVOLVING EXCAVATION, INCLUDING THAT FOR WATER, SEWER, STORM DRAIN AND UTILITY CONDUITS AND ALL SERVICE CONNECTIONS AND METER BOXES (NOT PERMITTED IN DRIVEWAYS) SHALL BE COMPLETED AND OBSERVED AND APPROVED BY THE AGENCY HAVING JURISDICTION AND THE STRUCTURAL BACKFILL OBSERVED AND TESTED FOR COMPACTION AND APPROVED BY THE GEOTECHNICAL ENGINEER BEFORE AGGREGATE BASE, PAVING AND OTHER PERMANENT SURFACE CONSTRUCTION MAY COMMENCE.
11. BEFORE COMMENCING EXCAVATION, CONTRACTOR SHALL CONTACT PUBLIC WORKS AND UTILITY COMPANIES OR OTHER OWNERS OF SUBSURFACE FACILITIES WITHIN THE WORK SITE AND SHALL VERIFY WHETHER OR NOT A REPRESENTATIVE WILL BE PRESENT BEFORE AND/OR DURING EXCAVATION, AND SHALL DETERMINE SITE SPECIFIC REQUIREMENTS FOR EXCAVATION.
12. CONTRACTOR SHALL NOTIFY PUBLIC WORKS, BUILDING AND SAFETY, UTILITY COMPANIES, GEOTECHNICAL ENGINEER, AND ENGINEER OF RECORD, AT LEAST 48 HOURS BEFORE START OF ANY CONSTRUCTION AND OF THE TIME AND LOCATION OF PRE-CONSTRUCTION CONFERENCE, AND SHALL DETERMINE FROM EACH PARTY THEIR SCOPE OF WORK TO BE OBSERVED AND BY WHOM, AND SCOPE OF TESTING. DURING THE COURSE OF WORK, CONTRACTOR SHALL BE RESPONSIBLE FOR CALLING FOR OBSERVATION AND TESTING AS STIPULATED PURSUANT TO ABOVE DETERMINATIONS. WORK NOT OBSERVED AND TESTED WILL BE SUBJECT TO REJECTION.
13. CONTRACTOR SHALL FURNISH, INSTALL, AND MAINTAIN SUCH SHEETING, SHORING, BRACING, AND/OR OTHER PROTECTION AS IS NECESSARY TO PREVENT FAILURE OF TEMPORARY EXCAVATIONS AND EMBANKMENTS AND TO PREVENT DAMAGE TO EXISTING IMPROVEMENTS, TEMPORARY IMPROVEMENTS, AND PARTIALLY COMPLETED PORTIONS OF THE WORK. CONTRACTOR SHALL BE SOLELY RESPONSIBLE FOR THE SUFFICIENCY OF SUCH SUPPORTS AND/OR OTHER PROTECTION PER ALL REQUIREMENTS OF COLORADO DEPARTMENT OF PUBLIC HEALTH & ENVIRONMENT AND OSHA.
14. CONTRACTOR SHALL PROMPTLY NOTIFY ENGINEER OF RECORD AND AUTHORITY HAVING JURISDICTION BY TELEPHONE AND IN WRITING UPON DISCOVERY OF, AND BEFORE DISTURBING ANY PHYSICAL CONDITIONS DIFFERING FROM THOSE REPRESENTED BY APPROVED PLANS AND SPECIFICATIONS.
15. CONTRACTOR SHALL MAINTAIN A COMPLETE AND ACCURATE RECORD OF ALL CHANGES OF CONSTRUCTION FROM THAT SHOWN ON THESE PLANS AND SPECIFICATIONS FOR THE PURPOSE OF PROVIDING A BASIS FOR CONSTRUCTION OF RECORD DRAWINGS. NO CHANGES SHALL BE MADE WITHOUT PRIOR WRITTEN APPROVAL OF ENGINEER OF RECORD AND AUTHORITY HAVING JURISDICTION. UPON COMPLETION OF THE PROJECT, CONTRACTOR SHALL DELIVER THIS RECORD OF ALL CONSTRUCTION CHANGES TO ENGINEER ALONG WITH A LETTER WHICH DECLARES THAT, OTHER THAN THESE NOTED CHANGES, "THE PROJECT WAS CONSTRUCTED IN CONFORMANCE WITH THE APPROVED PLANS AND SPECIFICATIONS."
    WARNING: ENGINEER PREPARING THESE PLANS WILL NOT BE RESPONSIBLE FOR, OR LIABLE FOR, UNAUTHORIZED CHANGES TO OR USES OF THESE PLANS. ALL CHANGES TO THESE PLANS MUST BE APPROVED IN WRITING BY PREPARER.
16. CONTRACTOR AGREES THAT, IN ACCORDANCE WITH GENERALLY ACCEPTED CONSTRUCTION PRACTICES, CONTRACTOR WILL BE REQUIRED TO ASSUME SOLE AND COMPLETE RESPONSIBILITY FOR JOB SITE CONDITIONS DURING THE COURSE OF CONSTRUCTION OF THIS PROJECT INCLUDING SAFETY OF ALL PERSONS AND PROPERTY, THAT THIS REQUIREMENT SHALL BE MADE TO APPLY CONTINUOUSLY AND NOT BE LIMITED TO NORMAL WORKING HOURS. CONTRACTOR FURTHER AGREES TO DEFEND, INDEMNIFY AND HOLD DESIGN PROFESSIONALS HARMLESS FROM ALL LIABILITY AND CLAIMS, REAL OR ALLEGED, IN CONNECTION WITH THE PERFORMANCE OF WORK ON THIS PROJECT AND ACCEPTS LIABILITY ARISING FROM THE SOLE NEGLIGENCE OF DESIGN PROFESSIONALS.
17. CONTRACTOR SHALL BE SOLELY RESPONSIBLE FOR VEHICULAR AND PEDESTRIAN TRAFFIC CONTROL AND SAFETY AND SHALL FURNISH, INSTALL, AND MAINTAIN SUCH FENCING, SIGNS, LIGHTS, TRENCH PLATES, BARRICADES, AND/OR OTHER PROTECTION AS IS NECESSARY FOR SAID CONTROL AND SAFETY.
18. CONTRACTOR AGREES TO ASSUME SOLE AND COMPLETE RESPONSIBILITY FOR PROTECTION OF PUBLIC AND PRIVATE PROPERTY AT OR IN THE VICINITY OF THE JOB SITE AND FURTHER AGREES TO, AT CONTRACTOR'S EXPENSE, REPAIR OR REPLACE TO ORIGINAL CONDITION, ALL EXISTING IMPROVEMENTS WITHIN OR IN THE VICINITY OF THE JOB SITE WHICH ARE NOT DESIGNATED FOR REMOVAL AND WHICH ARE DAMAGED OR REMOVED AS A RESULT OF CONTRACTOR'S OPERATIONS.

DEMOLITION NOTES:

1. THE EXISTENCE AND APPROXIMATE LOCATIONS OF ANY UNDERGROUND UTILITIES OR STRUCTURES SHOWN ON THESE PLANS ARE OBTAINED BY THE AVAILABLE RECORDS PROVIDED. THE CIVIL ENGINEER ASSUMES NO LIABILITY AS TO THE EXACT LOCATION OF SAID LINES, NOR FOR UTILITY OR IRRIGATION LINES WHOSE LOCATIONS ARE NOT SHOWN. THE CONTRACTOR SHALL BE RESPONSIBLE FOR NOTIFYING ALL UTILITY COMPANIES PRIOR TO WORK OR POTHOLE TO DETERMINE THE EXACT LOCATIONS OF ALL LINES AFFECTING THIS WORK, WHETHER OR NOT SHOWN HEREON. THE CONTRACTOR SHALL BE RESPONSIBLE FOR ANY DAMAGE TO OR PROTECTION OF ALL EXISTING UTILITY LINES.
2. THE CONTRACTOR IS RESPONSIBLE FOR THE DEMOLITION OF THE SITE AND SHALL REMOVE AND DISPOSE OF ALL STRUCTURES ABOVE AND OR BELOW GROUND UNLESS NOTED OTHERWISE. ANY HAZARDOUS MATERIALS ENCOUNTERED SHALL BE HANDLED AND REMOVED AS REQUIRED BY LOCAL AND/OR STATE LAWS AT NO COST TO THE OWNER.
3. THE CONTRACTOR SHALL EXERCISE DUE CARE TO AVOID DAMAGE TO EXISTING HARDSCAPE IMPROVEMENTS, UTILITY FACILITIES, AND LANDSCAPING FEATURES THAT ARE NOT AFFECTED BY THESE PLANS.
4. ALL JOIN LINES SHALL BE SAWCUT ON A NEAT, STRAIGHT LINE PARALLEL WITH THE JOIN. THE CUT EDGE SHALL BE PROTECTED FROM CRUSHING, AND ALL BROKEN EDGES SHALL BE RE-CUT PRIOR TO JOINING.
5. ALL EXISTING OBJECTIONABLE MATERIALS THAT CONFLICT WITH PROPOSED IMPROVEMENTS INCLUDING, BUT NOT LIMITED TO, BUILDING FOUNDATIONS, UTILITIES, APPURTENANCES, TREES, SIGNS, STRUCTURES, ETC. SHALL BE REMOVED AND DISPOSED BY THE CONTRACTOR AT NO COST TO THE OWNER, UNLESS NOTED OTHERWISE HEREIN, OR AS DIRECTED BY THE CONSTRUCTION MANAGER.
6. THE CONTRACTOR SHALL PROTECT ALL EXISTING STREETS FROM DAMAGES CAUSED BY HIS OPERATIONS. ANY CURBS DAMAGED DURING HIS OPERATIONS SHALL BE SAWCUT AND REPLACED AT NO COST TO THE OWNER. ANY EXISTING PAVING IDENTIFIED AS POTENTIALLY NEEDING TO BE REPLACED SHALL BE BROUGHT TO THE ATTENTION OF THE OWNER'S REPRESENTATIVE PRIOR TO THE COMMENCEMENT OF WORK.
7. THE CONTRACTOR SHALL PERFORM AND BE RESPONSIBLE FOR ALL CLEARING AND GRUBBING OPERATIONS AS NECESSARY TO COMPLETE THE WORK, INCLUDING TRANSPORTATION AND DISPOSAL OF ALL REMOVED MATERIALS, AND ALL ASSOCIATED COSTS.

GENERAL GRADING NOTES:

1. GRADING SHALL BE IN CONFORMANCE WITH RECOMMENDATIONS MADE BY THE GEOTECHNICAL ENGINEER DURING OBSERVATION AND TESTING OF SITE DEMOLITION, PREPARATION, GRADING, AND DEVELOPMENT WORK. FOR ANY CONFLICT BETWEEN THESE PLANS AND THE RECOMMENDATIONS AND/OR SPECIFICATIONS OF THE GEOTECHNICAL ENGINEER, THE MORE STRINGENT PROVISION SHALL GOVERN.
2. AREAS TO BE GRADED SHALL BE CLEARED OF ALL VEGETATION (EXCEPT TREES INDICATED TO REMAIN), INCLUDING ROOTS AND ROOT STRUCTURES, OTHER ORGANIC MATERIAL, DEBRIS, NON-COMPLYING FILL, AND OTHER MATERIAL UNSUITABLE FOR SUPPORT OF FILL AND/OR PROPOSED IMPROVEMENTS, AS RECOMMENDED BY AND UNDER THE OBSERVATION AND TESTING OF THE GEOTECHNICAL ENGINEER. CALL THE INSPECTOR FOR INITIAL INSPECTION.
3. ALL UNSUITABLE SOIL MATERIALS AND RUBBISH AND DEBRIS RESULTING FROM DEMOLITION AND GRADING OPERATIONS SHALL BE REMOVED FROM THE JOB SITE; TRANSPORTED TO A SUITABLE LOCATION AND DISPOSED OF IN A PROPER AND LEGAL MANNER.
4. AREAS TO RECEIVE FILL MATERIAL AND AREAS TO RECEIVE BUILDINGS, EXTERIOR SLABS, WALKWAYS, WALLS, PAVEMENT AND OTHER STRUCTURAL IMPROVEMENTS SHALL BE PREPARED AS RECOMMENDED BY AND UNDER THE OBSERVATION AND TESTING OF THE GEOTECHNICAL ENGINEER. RECOMMENDATIONS FOR OVER EXCAVATION, ADDITIONAL SCARIFICATION, BACKFILL AND RECOMPACTION ARE CONTAINED IN THE PROJECT GEOTECHNICAL REPORT REFERENCED IN THE GENERAL NOTES ON THESE PLANS.
5. PRIOR TO PLACEMENT OF FILL AND BACKFILL MATERIAL, THE PREPARED AREA SHALL BE INSPECTED AND APPROVED BY THE INSPECTOR. THE GEOTECHNICAL ENGINEER SHALL ALSO OBSERVE THE AREAS TO BE FILLED. ALLOW A MINIMUM 48-HOUR NOTICE. FILL AND BACKFILL PLACED ON THE PREPARED AREA WITHOUT THE REQUIRED OBSERVATION SHALL BE REMOVED.
6. ALL FILL MATERIAL, WHETHER EXCAVATED ON-SITE OR IMPORTED FROM OFF-SITE, SHALL BE TESTED AND APPROVED BY THE GEOTECHNICAL ENGINEER PRIOR TO PLACEMENT. IMPORTED FILL MATERIAL SHALL BE EQUAL TO OR BETTER IN QUALITY THAN THE ON-SITE SOILS AND SHALL CONFORM TO THE RECOMMENDATION OF THE GEOTECHNICAL ENGINEER. THE GEOTECHNICAL ENGINEER SHALL TEST AND APPROVE THE SOIL PROPOSED FOR IMPORT FOR STRUCTURAL FILL PRIOR TO IMPORTATION TO THE SITE. THE LANDSCAPE ARCHITECT AND THE GEOTECHNICAL ENGINEER SHALL TEST AND APPROVE THE SOIL PROPOSED FOR IMPORT FOR LANDSCAPE AREA SURFACE MATERIAL PRIOR TO IMPORTATION TO THE SITE.
7. CONTRACTOR SHALL REFER TO THE FOLLOWING AS APPLICABLE:
   - ARCHITECT'S PLANS FOR ADDITIONAL GRADING REQUIREMENTS IN BUILDING AREAS.
   - LANDSCAPE ARCHITECT'S PLANS FOR TREE PRESERVATION REQUIREMENTS AND FOR SUBGRADE ALLOWANCES IN LANDSCAPE AREAS.
   - PUBLIC IMPROVEMENT PLANS FOR INTERFACING WITH PUBLIC GRADING, PAVING, STORM DRAINAGE AND UTILITY IMPROVEMENTS.
8. WHERE PLANTER AREAS ARE SHOWN ON THE PLANS ADJACENT TO BUILDINGS AND ARE CONTAINED BY WALKS / FLATWORK LESS THAN 8" BELOW BOTTOM OF SILL PLATE OR WHERE ADJACENT FINISH GRADE OUTSIDE A BUILDING IS SHOWN TO BE LESS THAN 8" BELOW BOTTOM OF SILL PLATE, IT IS THE CONTRACTOR'S RESPONSIBILITY TO VERIFY THAT BUILDING PLANS CALL FOR APPROPRIATE DAMPPROOF OR WATERPROOF CONSTRUCTION AND IS CONSTRUCTED IN ACCORDANCE WITH ALL BUILDING APPLICABLE CODE REQUIREMENTS.
9. PLAN ELEVATIONS SHOWN ON SOIL AND LANDSCAPED AREAS ARE FINISH GRADE (FINISH SURFACE) ELEVATIONS INTENDED TO ESTABLISH SURFACE DRAINAGE CONTROL FOR THESE AREAS. DURING GRADING OPERATIONS, THICKNESSES (SUBGRADE ALLOWANCES) SPECIFIED BY LANDSCAPE ARCHITECT FOR TURF, WOOD CHIPS, MULCH, ETC. SHALL BE SUBTRACTED FROM THESE ELEVATIONS TO ESTABLISH FINISH SUBGRADE.
10. BEFORE PLACEMENT OF AGGREGATE BASE OR SUBBASE MATERIAL IN PAVEMENT AREAS, THE SUBGRADE SOIL SHALL BE REVIEWED AND TESTED BY THE GEOTECHNICAL ENGINEER. DURING PAVING OPERATIONS, STRUCTURAL SECTION COMPACTION SHALL BE OBSERVED AND TESTED BY THE GEOTECHNICAL ENGINEER.
11. QUALITY REVIEW AND REPORTING REQUIREMENTS.
    A. GRADING AND IMPROVEMENTS FOUND NOT IN CONFORMANCE WITH APPROVED PLANS AND DESIGN INTENT SHALL BE CORRECTED BY CONTRACTOR AT CONTRACTOR'S EXPENSE. ADDITIONAL SURVEYING TO CONFIRM ELEVATIONS AFTER CORRECTIVE MEASURES SHALL ALSO BE AT CONTRACTOR'S EXPENSE.

    REQUIREMENTS FOR VARIOUS SURFACING CONDITIONS ARE AS FOLLOWS:

    - DIRT: NOT LESS THAN 2% (1/4" PER FOOT) SLOPE IN DIRECTION OF SURFACE DRAINAGE AND 0.10 FOOT MAXIMUM DEVIATION FROM DESIGN ELEVATION AT ANY LOCATION
    - A.C. PAVEMENT: NOT LESS THAN 1% (1/8 INCH PER FOOT) SLOPE IN DIRECTION OF SURFACE DRAINAGE AND 0.04 FOOT MAXIMUM DEVIATION FROM DESIGN ELEVATION AT ANY LOCATION
    - CONCRETE: NOT LESS THAN 0.5% (1/16 INCH PER FOOT) SLOPE IN DIRECTION OF SURFACE DRAINAGE AND 0.02 FOOT MAXIMUM DEVIATION FROM DESIGN ELEVATION AT ANY LOCATION UNLESS NOTED OTHERWISE ON PLANS.

TRENCHING AND BACKFILL NOTES:

1. ALL TRENCHING, BEDDING AND BACKFILL MATERIAL AND CONSTRUCTION, SHALL BE IN ACCORDANCE WITH THESE PLANS INCLUDING THE PIPE TRENCH DETAIL.
2. TRENCH OR STRUCTURE EXCAVATION SUBGRADE SHALL BE OBSERVED BY THE GEOTECHNICAL ENGINEER PRIOR TO PLACEMENT OF BEDDING MATERIAL OR FORMS. WET OR UNSTABLE SOIL ENCOUNTERED IN THE BOTTOM OF THE EXCAVATION AND DEEMED BY THE GEOTECHNICAL ENGINEER TO BE INCAPABLE OF PROPERLY SUPPORTING THE PIPE OR STRUCTURE BEING CONSTRUCTED, SHALL BE REMOVED TO THE DEPTH RECOMMENDED BY THE GEOTECHNICAL ENGINEER AND THE EXCAVATION BACKFILLED TO THE BOTTOM OF THE PIPE OR STRUCTURE GRADE WITH SUITABLE MATERIAL RECOMMENDED BY THE GEOTECHNICAL ENGINEER.
3. WATER ENCOUNTERED IN TRENCH OR STRUCTURE EXCAVATION SHALL BE REMOVED BY THE CONTRACTOR TO THE SATISFACTION OF THE GEOTECHNICAL ENGINEER TO PROVIDE DRY CONDITIONS DURING CONSTRUCTION OF PIPE OR STRUCTURE.
4. BEDDING AND BACKFILL MATERIAL AND COMPACTED DENSITY, SHALL BE TESTED FOR COMPLIANCE WITH APPLICABLE REQUIREMENTS BY THE GEOTECHNICAL ENGINEER.
5. BEDDING AND PIPE ZONE BACKFILL MATERIAL, SHALL BE COMPACTED TO NOT LESS THAN 95% OF MAXIMUM DENSITY. TRENCH BACKFILL SHALL BE COMPACTED TO NOT LESS THAN 90% OF MAXIMUM DENSITY. THE UPPER 12" BELOW THE BASE OR SUB-BASE COURSE IN PAVED AND OTHER TRAFFIC AREAS AND BELOW THE CONCRETE OR SAND COURSE IN WALKWAY AREAS SHALL BE COMPACTED TO NOT LESS THAN 95% OF MAXIMUM DENSITY. BACKFILL COMPACTION SHALL BE TESTED FOR COMPLIANCE WITH THESE REQUIREMENTS IN ACCORDANCE WITH ASTM D-1557, LATEST REVISION, AND REPORTED BY THE GEOTECHNICAL ENGINEER.
6. CLASS I OR CLASS II (TRENCH) BACKFILL SHALL NOT BE PLACED UNTIL BEDDING AND INITIAL (PIPE ZONE) BACKFILL HAVE BEEN OBSERVED, TESTED AND APPROVED.
7. COMPACTION BY FLOODING OR JETTING IS NOT PERMITTED.
8. CONTRACTOR SHALL REVIEW THE GEOTECHNICAL REPORT(S), THE PROJECT WORK AREA AND VICINITY, AND SHALL FAMILIARIZE HIMSELF WITH THE WORK AREA CONDITIONS. CONTRACTOR SHALL MAKE HIS OWN DEDUCTIONS AND CONCLUSIONS AS TO HOW EXISTING SURFACE AND SUB-SURFACE CONDITIONS WILL AFFECT OR BE AFFECTED BY HIS CONSTRUCTION OPERATIONS, INCLUDING THE NATURE OF MATERIALS TO BE EXCAVATED. THE DEGREE OF DIFFICULTY ASSOCIATED WITH MAKING AND MAINTAINING THE REQUIRED EXCAVATIONS, AND THE DEGREE OF DIFFICULTY WHICH MAY ARISE FROM SUBSURFACE CONDITIONS INCLUDING GROUNDWATER, AND SHALL ACCEPT FULL RESPONSIBILITY THEREOF.
9. IT IS THE CONTRACTOR'S RESPONSIBILITY TO PROTECT THE INTEGRITY OF EXISTING PAVEMENT ALONG AND BEHIND THE TRENCH SAWCUT LINES DURING CONSTRUCTION. IF THIS PAVEMENT IS BROKEN-OFF OR OTHERWISE DAMAGED BEFORE NEW PAVEMENT IS PLACED, CONTRACTOR SHALL SAWCUT A NEW CONFORM LINE PARALLEL WITH, FULL LENGTH OF, AND SUFFICIENT DISTANCE (1-FOOT MINIMUM) BEHIND ORIGINAL SAWCUT SO AS TO REMOVE DAMAGED PAVEMENT AND / OR IRREGULARITY ALONG THE CONFORM LINE.

CONCRETE PAVEMENT AND APPURTENANT CONCRETE NOTES:

1. UNLESS MODIFIED OR OTHERWISE SPECIFIED BY THE CONSTRUCTION NOTES THAT FOLLOW HEREON INCLUDING THOSE UNDER SEPARATE HEADINGS, PRIVATE ROADWAY MATERIALS AND CONSTRUCTION SHALL BE IN ACCORDANCE WITH THE CITY OF COLORADO SPRINGS STANDARD SPECIFICATIONS SECTION 500 CONCRETE.
2. COMPACTION OF FILL, SUBGRADE AND BASE COURSES AS WELL AS ALL TRENCH BEDDING AND BACKFILL SHALL BE OBSERVED AND TESTED FOR COMPLIANCE WITH APPLICABLE REQUIREMENTS BY THE GEOTECHNICAL ENGINEER.
3. CONCRETE SHALL MEET REQUIREMENTS OF A MINIMUM 28 DAY COMPRESSIVE STRENGTH OF 4000 PSI, MAXIMUM WATER/CEMENT RATIO BY WEIGHT OF 0345, AND MINIMUM CEMENT CONTENT PER CUBIC YARD OF 564 POUNDS.
4. PORTLAND CEMENT SHALL CONFORM TO THE SPECIFICATIONS FOR PORTLAND CEMENT (ASTM C-150) AND SPECIFICATIONS FOR AIR-ENTRAINED PORTLAND CEMENT (ASTM C-175 OR C-595) AND SHALL BE TYPE IIA (AIR-ENTRAINING) CEMENT, UNLESS SULFATE CONDITIONS ALLOW OTHERWISE. TABLE 2.2.3 IN CHAPTER 2.2 OF ACI 201 PRESENTS CEMENT RECOMMENDATIONS FOR SULFATE RESISTANCES. IN ADDITION TO THE STANDARD CHEMICAL REQUIREMENTS FOR PORTLAND CEMENT IN ASTM C-150, THE MAXIMUM PERCENT OF ALKALIES SHALL BE AS SPECIFIED IN TABLE 2 OF ASTM C-150 FOR LOW ALKALI CEMENT.
5. FINE AGGREGATE SHALL CONFORM TO ASTM C-33. FINE AGGREGATE SHALL CONSIST OF SAND OR OTHER INERT MATERIALS, OR COMBINATIONS THEREOF APPROVED BY THE ENGINEER, AND HAVING HARD, STRONG, DURABLE PARTICLES, FREE FROM ADHERENT COATING. FINE AGGREGATE SHALL BE THOROUGHLY WASHED TO REMOVE SHALE, COAL, MICA, CLAY, LOAM, ALKALI, ORGANIC MATTER OR OTHER DELETERIOUS MATTER. FINE AGGREGATE SHALL BE REGULARLY GRADED AND WHEN TESTED BY MEANS OF THE U.S. STANDARD, SIEVES SHALL CONFORM TO THE FOLLOWING REQUIREMENTS EXPRESSED AS PERCENTAGES BY WEIGHT:

SIEVE SIZE	PERCENT PASSING
3/8"	100
No 4	95-100
No 8	80-100
No 16	50-85
No 30	25-60
No 50	5-30
No 100	0-10
No 200	0-3

6. COARSE AGGREGATE SHALL CONFORM TO ASTM C33. COARSE AGGREGATE SHALL CONSIST OF GRAVEL, CRUSHED STONE, OR OTHER INERT MATERIAL OR COMBINATIONS THEREOF APPROVED BY THE ENGINEER, AND HAVING HARD, STRONG, DURABLE PIECES FREE FROM ADHERENT COATING. COARSE AGGREGATE SHALL BE THOROUGHLY WASHED OF CLAY, LOAM, BARK, STICKS, ALKALI, ORGANIC MATTER, SHALE, COAL, MICA, OR OTHER DELETERIOUS MATERIAL. Coarse AGGREGATE SHALL BE REGULARLY GRADED AND WHEN TESTED BY MEANS OF THE U.S. STANDARD, SIEVES SHALL CONFORM TO THE FOLLOWING REQUIREMENTS EXPRESSED AS PERCENTAGES BY WEIGHT:

SIEVE SIZE	PERCENT PASSING
1"	100
3/4"	90-100
3/8"	30-65
No 4	0-10
No 8	0-5

7. REINFORCING FIBER SHALL BE TYPE III CONFORMING TO ASTM C1116.
8. REINFORCING STEEL SHALL BE GRADE 60 BILLET STEEL CONFORMING TO ASTM A 615. STEEL BENDING PROCESS SHALL CONFORM TO THE REQUIREMENTS OF MANUAL OF STANDARD PRACTICE OF THE CONCRETE REINFORCING STEEL INSTITUTE. BENDING OR STRAIGHTENING SHALL BE ACCOMPLISHED SO THAT THE STEEL WILL NOT BE DAMAGED. KINKED BARS SHALL NOT BE USED.
9. JOINTS IN CONCRETE PAVEMENT
   A. WEAKENED PLANE CRACK CONTROL (CONTRACTION) JOINTS SHALL BE CONSTRUCTED AT REGULAR INTERVALS NOT EXCEEDING 10-FEET EACH WAY (LONGITUDINAL AND TRANSVERSE) AND AT ADDITIONAL LOCATIONS AS MAY BE CALLED FOR IN THE FIELD. JOINTS SHALL BE CONSTRUCTED PER SUBSECTION 303-5.4.2 OF THE SSPWC AS MODIFIED BY THE PLAN DETAILS AND THESE NOTES. REINFORCEMENT SHALL BE CONTINUOUS THROUGH JOINTS. DEPTH OF JOINTS SHALL BE 1/4 SLAB THICKNESS + 1/2-INCH (I.E., 2-INCHES FOR 6-INCH SLAB). JOINTS SHALL BE CONSTRUCTED BY SAWCUTTING GROOVES AS SOON AS CONCRETE HAS HARDENED SUFFICIENTLY TO PERMIT SAWING WITHOUT RAVELING (USUALLY 4 TO 24 HOURS AFTER PLACEMENT). JOINTS SHALL BE FILLED WITH JOINT SEALANT (SIKAFLEX-2CNS OR EQUIVALENT, COLOR LIMESTONE GRAY) AS SOON AFTER COMPLETION OF THE CURING PERIOD AS IS FEASIBLE AND BEFORE PAVEMENT IS OPENED TO TRAFFIC. JOINTS SHALL BE CLEANED OF ALL FOREIGN MATERIAL, INCLUDING MEMBRANE CURING COMPOUNDS, AND SHALL BE SURFACE-DRY WHEN SEALANT IS INSTALLED. JOINT LOCATIONS SHALL BE ADJUSTED AS NECESSARY TO ALIGN WITH THOSE ALREADY CONSTRUCTED IN EXISTING ADJACENT (CONTIGUOUS) FEATURES SUCH AS CURBS AND GUTTERS. ALONG CURVES, TRANSVERSE JOINTS SHALL BE RADIAL.
   B. EXPANSION JOINTS SHALL BE CONSTRUCTED AT LOCATIONS CALLED FOR ON THE PLANS. JOINTS SHALL BE CONSTRUCTED PER SUBSECTION 303-5.4.2 AS MODIFIED BY THE PLAN DETAILS AND THESE NOTES. JOINTS SHALL BE CONSTRUCTED 1/2-INCH WIDE USING ONE PIECE OF PREFORMED JOINT FILLER INSTALLED FROM BOTTOM OF SLAB TO WITHIN 1" OF CONCRETE SURFACE. THE RESULTING RESERVOIR SHALL BE FILLED WITH JOINT SEALANT TO WITHIN ¼" OF CONCRETE SURFACE AS SOON AFTER COMPLETION OF THE CURING PERIOD AS IS FEASIBLE AND BEFORE PAVEMENT IS OPENED TO TRAFFIC. JOINTS SHALL BE CLEANED OF ALL FOREIGN MATERIAL, INCLUDING MEMBRANE CURING COMPOUND, AND SHALL BE SURFACE-DRY WHEN SEALANT IS INSTALLED. REINFORCING BARS SHALL BE INTERRUPTED 3 INCHES CLEAR OF EXPANSION JOINTS AND MINIMUM 14-INCH LONG SMOOTH DOWELS INSTALLED ACROSS, AND CENTERED ON, THE JOINT. DOWEL DIAMETER SHALL BE 1/8 SLAB THICKNESS (I.E., 1" FOR 8" SLAB, 3/4" FOR 6" SLAB). ONE-HALF (ONE END) OF THE DOWEL SHALL BE INSTALLED WITHIN A "SPEED DOWEL" TUBE WITH A 1-INCH GAP BETWEEN THE END OF THE DOWEL AND THE SEALED END OF THE TUBE. DOWELS SHALL BE INSTALLED AT 12 INCHES ON CENTER HORIZONTALLY, CENTERED IN THE SLAB VERTICALLY, AND A MINIMUM OF 3 INCHES CLEAR OF ANY REBAR. JOINT LOCATIONS SHALL BE ADJUSTED AS NECESSARY TO ALIGN WITH THOSE ALREADY CONSTRUCTED IN EXISTING ADJACENT (CONTIGUOUS) FEATURES SUCH AS CURBS AND GUTTERS. ALONG CURVES, TRANSVERSE JOINTS SHALL BE RADIAL.
13. JOINTS IN CURBS, GUTTERS AND WALKS
    A. TRANSVERSE WEAKENED PLANE CRACK CONTROL JOINTS SHALL BE CONSTRUCTED AT REGULAR INTERVALS NOT EXCEEDING 10-FEET, DIRECTLY ABOVE DRAIN PIPES THAT OUTLET THROUGH CURB AND AT ADDITIONAL LOCATIONS AS MAY BE CALLED FOR ON THE PLANS. JOINTS SHALL BE CONSTRUCTED PER SUBSECTION 303-5.4.3 PARAGRAPH B OF THE SSPWC AS MODIFIED BY THE PLAN DETAILS AND THESE NOTES. REINFORCEMENT SHALL BE CONTINUOUS THROUGH JOINTS. JOINT LOCATIONS SHALL BE ADJUSTED AS NECESSARY TO ALIGN WITH THOSE ALREADY CONSTRUCTED IN EXISTING ADJACENT (CONTIGUOUS) FEATURES. ALONG CURVES AND WALK RETURNS, JOINTS SHALL BE RADIAL.
    B. TRANSVERSE EXPANSION JOINTS SHALL BE CONSTRUCTED AT BCR, ECR, AND AT REGULAR INTERVALS NOT EXCEEDING 30-FEET; ALONG EDGES OF DRIVEWAYS, WHEELCHAIR RAMPS, AND FIXED OBJECTS AND STRUCTURES (FIRE HYDRANT, LIGHT STANDARD, UTILITY POLE, DRAIN INLET, MANHOLE OR VALVE COVER, SCREEN/RETAINING WALL, BUILDING WALL, ETC.); AT ADDITIONAL LOCATIONS AS MAY BE CALLED FOR ON THE PLANS. EXPANSION JOINTS SHALL NOT BE CONSTRUCTED IN CROSS OR VALLEY GUTTER WHICH IS SEPARATE FROM CURB. JOINTS SHALL BE CONSTRUCTED PER SUBSECTION 303-5.4.2 OF THE SSPWC AS MODIFIED BY THE PLAN DETAILS AND THESE NOTES. JOINTS SHALL BE CONSTRUCTED 3/8-INCH WIDE USING ONE PIECE OF PREFORMED JOINT FILLER INSTALLED FORM BOTTOM OF SLAB TO WITHIN 1-INCH OF CONCRETE SURFACE. THE RESULTING RESERVOIR SHALL BE FILLED WITH JOINT SEALANT TO WITHIN 1/4-INCH OF CONCRETE SURFACE AS SOON AFTER COMPLETION OF THE CURING PERIOD AS IS POSSIBLE. JOINTS SHALL BE CLEANED OF ALL FOREIGN MATERIAL, INCLUDING MEMBRANE CURING COMPOUNDS, AND SHALL BE SURFACE-DRY WHEN SEALANT IS INSTALLED. LONGITUDINAL REINFORCING BARS SHALL BE INTERRUPTED 3 INCHES CLEAR OF EXPANSION JOINTS AND MINIMUM 14-INCH LONG #5 SMOOTH DOWELS INSTALLED ACROSS, AND CENTERED ON, THE JOINT. ONE-HALF (ONE END) OF THE DOWEL SHALL BE INSTALLED WITHIN A "SPEED DOWEL" TUBE WITH A 1-INCH GAP BETWEEN THE END OF THE DOWEL AND THE SEALED END OF THE TUBE. DOWELS SHALL BE CENTERED VERTICALLY IN THE CONCRETE AND A MINIMUM OF 3 INCHES CLEAR HORIZONTALLY OF ANY REBAR. JOINT LOCATIONS SHALL BE ADJUSTED AS NECESSARY TO ALIGN WITH THOSE ALREADY CONSTRUCTED IN EXISTING ADJACENT (CONTIGUOUS) FEATURES. ALONG CURVES AND THROUGH WALK RETURNS, JOINTS SHALL BE RADIAL.
14. APPLY BROOM FINISH TO ALL FLATWORK SURFACES IN CONFORMANCE WITH ACI 301. PROVIDE FINE OR MEDIUM-COARSE TEXTURE AND COARSENESS.
15. ALL EXISTING AND PROPOSED VALVE AND UTILITY BOXES AND MANHOLE FRAMES AND COVERS SHALL BE ADJUSTED TO FINISH GRADE.
16. AFTER CONSTRUCTION OF CONCRETE PAVEMENT AND APPURTENANT CONCRETE FEATURES, A FLOOD TEST SHALL BE CONDUCTED TO REVIEW SURFACE DRAINAGE, AS FOLLOWS:
    A. WATER SHALL BE SUPPLIED AND DISCHARGED IN SUFFICIENT QUANTITY TO COMPLETELY WET AND COVER ALL PAVEMENT AND CONCRETE GUTTER AREAS; THE OUTLINE LIMITS OF RESIDUAL STANDING/PONDED WATER SHALL THEN BE MARKED
    B. CONCRETE IMPROVEMENTS SHALL BE REMOVED AND REPLACED, AT NO ADDITIONAL COST TO THE OWNER, AS NECESSARY TO PROVIDE POSITIVE SURFACE DRAINAGE AND TO PREVENT PONDING OF WATER ON PAVEMENT SURFACES AND IN GUTTERS
    C. ADDITIONAL FLOOD TESTING SHALL BE CONDUCTED TO CONFIRM SUCCESS OF CORRECTIVE MEASURES.
    D. WHERE SAWCUT LINE IS CONSTRUCTED ALONG CONFORM LINE WITH EXISTING A.C. PAVEMENT, IT IS CONTRACTOR'S RESPONSIBILITY TO PROTECT THE INTEGRITY OF THE PAVEMENT ALONG AND BEHIND THE SAWCUT LINE DURING CONSTRUCTION; IF THIS PAVEMENT IS BROKEN-OFF OR OTHERWISE DAMAGED BEFORE NEW PAVEMENT IS PLACED, CONTRACTOR SHALL SAWCUT A NEW CONFORM LINE PARALLEL WITH, FULL LENGTH OF, AND SUFFICIENT DISTANCE BEHIND ORIGINAL SAWCUT SO AS TO REMOVE DAMAGED PAVEMENT AND/OR IRREGULARITY ALONG THE CONFORM LINE.

USE OF PLANS:

THIS DRAWING IS PROVIDED IN AN ELECTRONIC FORMAT AS A COURTESY, IF REQUESTED BY THE USER. THE DELIVERY OF THE ELECTRONIC FILE DOES NOT CONSTITUTE THE DELIVERY OF OUR PROFESSIONAL WORK PRODUCT. THE SIGNED HARD COPY PREPARED FOR THE PROJECT CONSTITUTES OUR PROFESSIONAL WORK PRODUCT AND THE HARD COPY MUST BE REFERRED TO FOR THE CORRECT DESIGN INFORMATION. THESE PLANS HAVE BEEN PREPARED SOLELY FOR USE FOR THE PROJECT SCOPE AND SITE SPECIFICALLY IDENTIFIED HEREON AT THE TIME THESE PLANS ARE SIGNED. THE ENGINEER PREPARING THESE PLANS WILL NOT BE RESPONSIBLE FOR, OR LIABLE FOR, USE OF ANY PART OF THESE PLANS, INCLUDING ANY NOTE OR DETAIL, FOR ANY UNAPPROVED OR REVISED PROJECT SCOPE, OR FOR ANY OTHER PROJECT AT THIS OR ANY OTHER SITE. USER AGREES TO INDEMNIFY AND HOLD HARMLESS ASHLEY & VANCE FOR ALL COSTS AND DAMAGES IF USED.

USE OF ELECTRONIC INFORMATION:

ELECTRONIC INFORMATION MAY BE PROVIDED BY THE ENGINEER FOR CONVENIENCE; UNDER NO CIRCUMSTANCES SHALL DELIVERY OF ELECTRONIC FILES FOR USE BY OTHERS BE DEEMED A SALE BY THE ENGINEER AND THE ENGINEER MAKES NO WARRANTIES, EITHER EXPRESS OR IMPLIED, OF MERCHANTABILITY AND FITNESS FOR ANY PARTICULAR PURPOSE. IN NO EVENT SHALL THE ENGINEER BE LIABLE FOR INDIRECT OR CONSEQUENTIAL DAMAGES AS A RESULT OF THE USE OR REUSE OF THE ELECTRONIC FILES BY OTHERS.

ELECTRONIC INFORMATION IS INTENDED TO PROVIDE INFORMATION SUPPLEMENTAL AND SUBORDINATE TO THE CONSTRUCTION CONTRACT DOCUMENTS. LAYOUT AND CONSTRUCTION OF PROJECT ELEMENTS SHALL BE BASED ON DIMENSIONS AND INFORMATION INCLUDED ON THE SIGNED AND SEALED CONSTRUCTION CONTRACT DOCUMENTS WHICH SHALL CONTROL OVER ELECTRONIC INFORMATION. USER IS RESPONSIBLE FOR CONFIRMING LOCATION OF PROPOSED IMPROVEMENTS BASED ON DIMENSIONS AND INFORMATION INCLUDED ON THE CONSTRUCTION CONTRACT DOCUMENTS; INCONSISTENCIES BETWEEN THE ELECTRONIC INFORMATION AND THE CONSTRUCTION CONTRACT DOCUMENTS SHALL BE BROUGHT TO THE ATTENTION OF THE ENGINEER FOR RESOLUTION PRIOR TO CONSTRUCTION.

PROJECT ELEMENTS SUCH AS MANHOLES, CATCH BASINS, UTILITY VAULTS, VALVE ASSEMBLIES, STAIRS, RAMPS, WALLS, ETC. ARE SHOWN SCHEMATICALLY IN THE ELECTRONIC INFORMATION AND CONSTRUCTION OF THESE ELEMENTS SHALL BE IN ACCORDANCE WITH THE CONSTRUCTION NOTES AND DETAILS PRESENTED OR REFERENCED IN THE SIGNED AND SEALED CONSTRUCTION CONTACT DOCUMENTS. IMPROVEMENTS CONSTRUCTED BASED ON ELECTRONIC INFORMATION AND IN CONFLICT WITH THE DRAWING DIMENSIONS DETAILS, AND THE CONSTRUCTION CONTRACT DOCUMENTS SHALL BE REMOVED AND CONSTRUCTED IN THE PROPER LOCATION AND DIMENSIONS AT CONTRACTOR'S SOLE EXPENSE.

DIGITAL DRAWINGS ARE TYPICALLY A COMPILATION OF DRAWINGS FROM A NUMBER OF SOURCES AND, AS SUCH, THERE IS INFORMATION IN THE ELECTRONIC FILE ISSUED BY THE ENGINEER THAT WAS NOT DEVELOPED BY THE ENGINEER AND IS NOT AUTHORIZED BY THE ENGINEER FOR USE BY OTHERS. ELECTRONIC INFORMATION PROVIDED BY THE ENGINEER SHALL ONLY BE APPLICABLE FOR IMPROVEMENTS DESIGNED BY THE ENGINEER AND WHICH ARE SPECIFICALLY DESIGNATED BY CONSTRUCTION NOTES AND/OR DETAILS ON THE SIGNED AND SEALED CONTRACT DOCUMENTS.

IF DIGITAL FILES ARE OBTAINED WITH THE INTENT TO USE THEM FOR PROJECT STAKING, THEY SHALL ONLY BE USED BY A QUALIFIED ENGINEER OR LAND SURVEYOR. DIGITAL INFORMATION SHALL ONLY BE USED FOR STAKING HORIZONTAL LOCATION OF PROPOSED IMPROVEMENTS AFTER IT HAS BEEN CONFIRMED WITH THE SIGNED AND SEALED CONSTRUCTION CONTRACT DOCUMENTS.

THE DIGITAL DRAWINGS ARE NOT INTENDED TO BE USED DIRECTLY FOR CONTROL OF CONTRACTOR'S GRADING OPERATIONS WITHOUT STAKING BY ENGINEER OR LAND SURVEYOR. THE INTERSECTION OF PROPOSED CUT AND FILL SLOPES WITH EXISTING GRADE IS APPROXIMATE WHERE SHOWN ON THE DRAWINGS AND SHALL BE CONFIRMED BY FIELD STAKING. IT IS THE CONTRACTOR'S RESPONSIBILITY TO CONSTRUCT SLOPES IN CONFORMANCE WITH THE SPECIFIED AND DETAILED REQUIREMENTS CONTAINED IN THE CONTRACT DOCUMENTS.

COLORADO SPRINGS UTILITIES
COMMERCIAL UTILITY SERVICE DESIGN APPROVAL

APPROVED
02/16/2024 10:14:26 AM
malcuran
Utility Service
Colorado Springs Utilities
It's how we're all connected

PROJECT NUMBER: 2024-C1002
CSU SHEET 2 OF 4

APPROVAL EXPIRES ONE (1) YEAR FROM THE DATE ABOVE AND RESUBMITTAL OF THESE PLANS FOR REVIEW AND APPROVAL IS REQUIRED IF CONSTRUCTION DOES NOT BEGIN DURING THIS PERIOD.

Plan Prepared By:
Ashley & Vance ENGINEERING, INC.
CIVIL • STRUCTURAL
9555 Ralston Road, Suite 201
Arvada, CO 80004
(303) 755-9762
www.ashleyvance.com

The use of these plans and specifications shall be restricted to the original site for which they were prepared and publication thereof is expressly limited to such use. Reproduction or publication by any method, in whole or in part, is prohibited. Title to these plans and specifications remain with Ashley & Vance Engineering, Inc. without prejudice. Visual contact with these plans and specifications shall constitute prima facie evidence of the acceptance of these restrictions.

Engineer of Record:
COLORADO LICENSED PROFESSIONAL ENGINEER, B. R. QUINTANA-JONES, 53998

PROSPECT LAKE PUMPHOUSE
1315 E COSTILLA STREET
COLORADO SPRINGS, CO 80910

Revisions:

1	.
2	.
3	.
4	.
5	.

Project Engineer: BRJ	Ext: 121
Project Manager: BRJ	
Date: 2.06.2024	Scale: PER PLAN
AV Job No: 221742	Sheet Size: 24" x 36"

NOTES SHEET

C-0.2

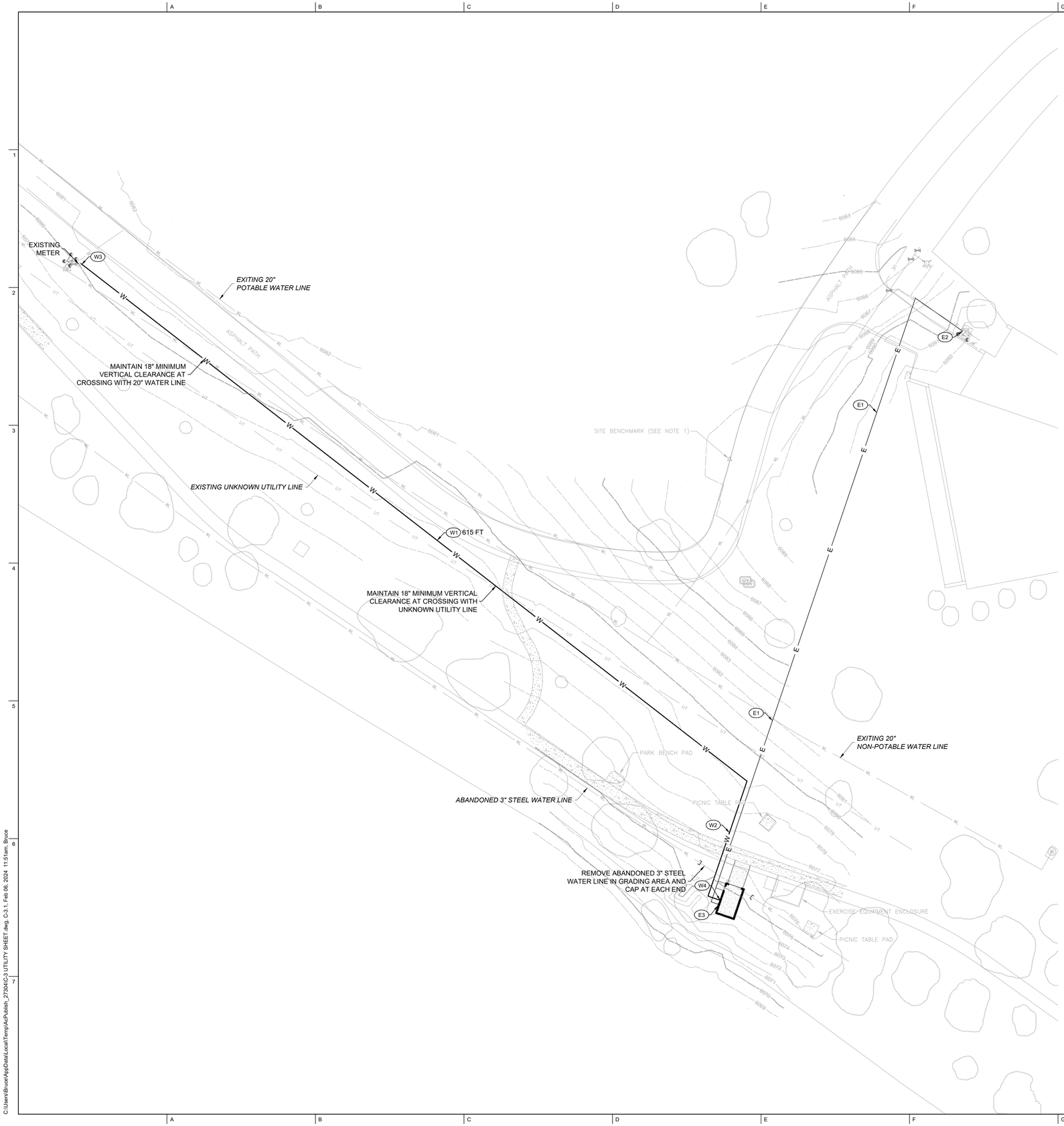

GENERAL NOTES:

ALL EXISTING UTILITIES SHOWN ARE BASED ON THE BEST AVAILABLE INFORMATION. CONTRACTOR TO POTHOLE ALL POINTS OF CONNECTION AND VERIFY ALL CLEARANCES. MATERIAL DEPTH AND LOCATION SHALL BE IDENTIFIED BY CONTRACTOR. IF THERE ARE ANY DIFFERENCES FROM PLAN WITH ANY OF THESE ITEMS, ENGINEER OF WORK SHALL BE NOTIFIED IMMEDIATELY.

WATER CONSTRUCTION NOTES:

- W1 INSTALL 1-1/2 INCH CTS HDPE DR-9 WATER LATERAL PER DETAIL 4, SHEET C-4.1.
- W2 INSTALL 1-1/2 INCH CTS HDPE DR-9 WATER LATERAL IN JOINT TRENCH WITH ELECTRICAL SERVICE PER DETAIL 5, SHEET C-4.1.
- W3 INSTALL 1-1/2 INCH WATER SERVICE CONNECTION TO EXISTING IRRIGATION LINE PER DETAIL 6, SHEET C-4.1.
- W4 INSTALL WATER CONNECTION TO STRUCTURE PER PLUMBING PLANS.

ELECTRICAL NOTES:

- E1 ELECTRICAL SERVICE CONDUIT, SIZE PER ELECTRICAL PLANS. FINAL DESIGN WILL BE DETERMINED BY SPRINGS UTILITIES FIELD ENGINEERING.
- E2 CONNECT TO EXISTING TRANSFORMER PER ELECTRICAL PLANS. FINAL DESIGN WILL BE DETERMINED BY SPRINGS UTILITIES FIELD ENGINEERING.
- E3 CONNECT TO PROPOSED STRUCTURE PER ELECTRICAL PLANS. FINAL DESIGN WILL BE DETERMINED BY SPRINGS UTILITIES FIELD ENGINEERING.

DIGALERT
DIAL TOLL FREE **811** OR (1-800-422-4133) AT LEAST TWO DAYS BEFORE YOU DIG
UNDERGROUND SERVICE ALERT

HORIZONTAL SCALE: 1" = 30'
30 0 30 60

COLORADO SPRINGS UTILITIES
COMMERCIAL UTILITY SERVICE DESIGN APPROVAL

APPROVED
02/16/2024 10:14:19 AM
malcuran
Utility Service
Colorado Springs Utilities
It's how we're all connected

PROJECT NUMBER: 2024-C1002
CSU SHEET 3 OF 4

APPROVAL EXPIRES ONE (1) YEAR FROM THE DATE ABOVE AND RESUBMITTAL OF THESE PLANS FOR REVIEW AND APPROVAL IS REQUIRED IF CONSTRUCTION DOES NOT BEGIN DURING THIS PERIOD.

Plan Prepared By:
Ashley&Vance ENGINEERING, INC.
9555 Ralston Road, Suite 201
Arvada, CO 80004
(303) 755-0762
www.ashleyvance.com
CIVIL • STRUCTURAL

The use of these plans and specifications shall be restricted to the original site for which they were prepared and publication thereof is expressly limited to such use. Reproduction or publication by any method, in whole or in part, is prohibited. Title to these plans and specifications remain with Ashley & Vance Engineering, Inc. without prejudice. Visual contact with these plans and specifications shall constitute prima facie evidence of the acceptance of these restrictions.

Engineer of Record:

COLORADO LICENSED
BRUCE R. QUINTANA
PROFESSIONAL ENGINEER
25996

PROSPECT LAKE PUMPHOUSE

1315 E COSTILLA STREET
COLORADO SPRINGS, CO 80910

Revisions:
1 .
2 .
3 .
4 .
5 .

Project Engineer: BRJ	Ext: 121
Project Manager: BRJ	
Date: 2.06.2024	Scale: PER PLAN
AV Job No: 221742	Sheet Size: 24" x 36"

UTILITY PLAN

C-3.1

C:\Users\Bruce\AppData\Local\Temp\AcPublish_27304\C-3 UTILITY SHEET.dwg, C-3.1, Feb 06, 2024 11:51am, Bruce

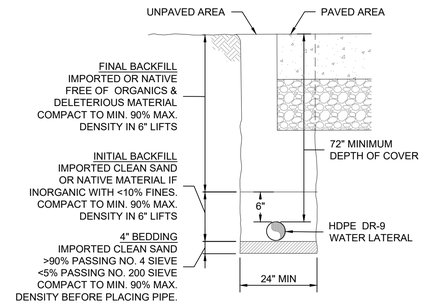

4 WATER TRENCH SECTION

NTS

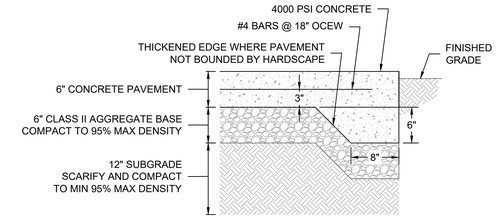

ACTUAL THICKNESS OF CONCRETE AND AGGREGATE BASE SHALL BE DETERMINED DURING CONSTRUCTION BY THE GEOTECHNICAL ENGINEER.

1 TYPICAL CONCRETE DRIVEWAY SECTION

NTS

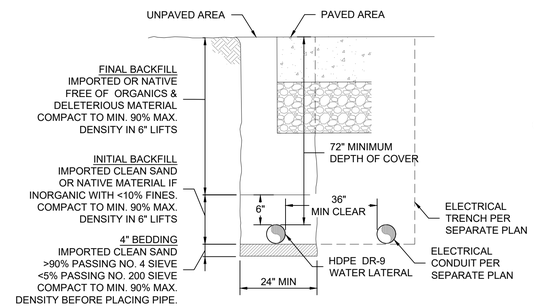

5 WATER AND ELECTRICAL TRENCH SECTION

NTS

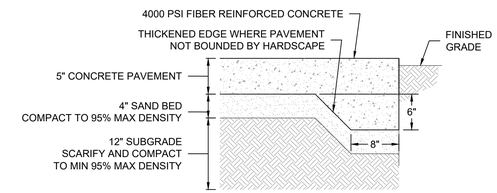

ACTUAL THICKNESS OF CONCRETE AND AGGREGATE BASE SHALL BE DETERMINED DURING CONSTRUCTION BY THE GEOTECHNICAL ENGINEER.

2 TYPICAL CONCRETE WALKWAY SECTION

NTS

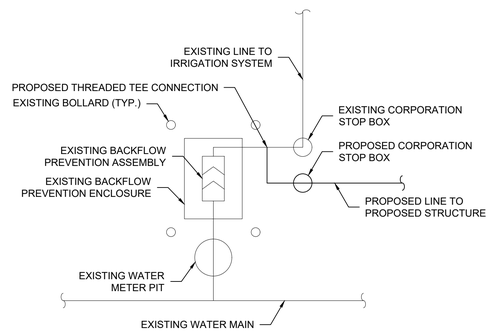

6 IRRIGATION CONNECTION DETAIL

NTS

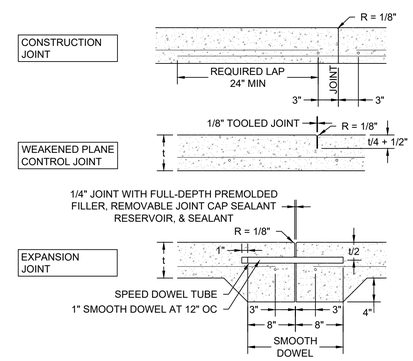

3 CONCRETE JOINT DETAILS

NTS

COLORADO SPRINGS UTILITIES
COMMERCIAL UTILITY SERVICE DESIGN APPROVAL

APPROVED
02/16/2024 10:14:08 AM
malcuran
Utility Service

Colorado Springs Utilities
It's how we're all connected

PROJECT NUMBER: 2024-C1002

CSU SHEET 4 OF 4

APPROVAL EXPIRES ONE (1) YEAR FROM THE DATE ABOVE AND RESUBMITTAL OF THESE PLANS FOR REVIEW AND APPROVAL IS REQUIRED IF CONSTRUCTION DOES NOT BEGIN DURING THIS PERIOD.

Plan Prepared By:

Ashley&Vance ENGINEERING, INC.

9555 Ralston Road, Suite 201
Arvada, CO 80004
(303) 755-0762
www.ashleyvance.com

CIVIL • STRUCTURAL

The use of these plans and specifications shall be restricted to the original site for which they were prepared and publication thereof is expressly limited to such use. Reproduction or publication by any method, in whole or in part, is prohibited. Title to these plans and specifications remain with Ashley & Vance Engineering, Inc. without prejudice. Visual contact with these plans and specifications shall constitute prima facie evidence of the acceptance of these restrictions.

Engineer of Record:

COLORADO LICENSED
B. R. QUINTANA
25196
PROFESSIONAL ENGINEER

PROSPECT LAKE PUMPHOUSE

1315 E COSTILLA STREET
COLORADO SPRINGS, CO 80910

Revisions:

1	.
2	.
3	.
4	.
5	.

Project Engineer: BRJ	Ext: 121
Project Manager: BRJ	
Date: 2.06.2024	Scale: PER PLAN
AV Job No: 221742	Sheet Size: 24" x 36"

DETAIL SHEET

C-4.1

C:\Users\Bruce\AppData\Local\Temp\AcPublish_27304\C-4 DETAIL SHEET.dwg, C-4.1, Feb 06, 2024 11:52am, Bruce

TOPOGRAPHIC EXHIBIT

PROSPECT LAKE PUMPHOUSE

MULTIPLE ADDRESSES: 1315 EAST PIKES PEAK AVENUE, COLORADO SPRINGS, COLORADO 80909.

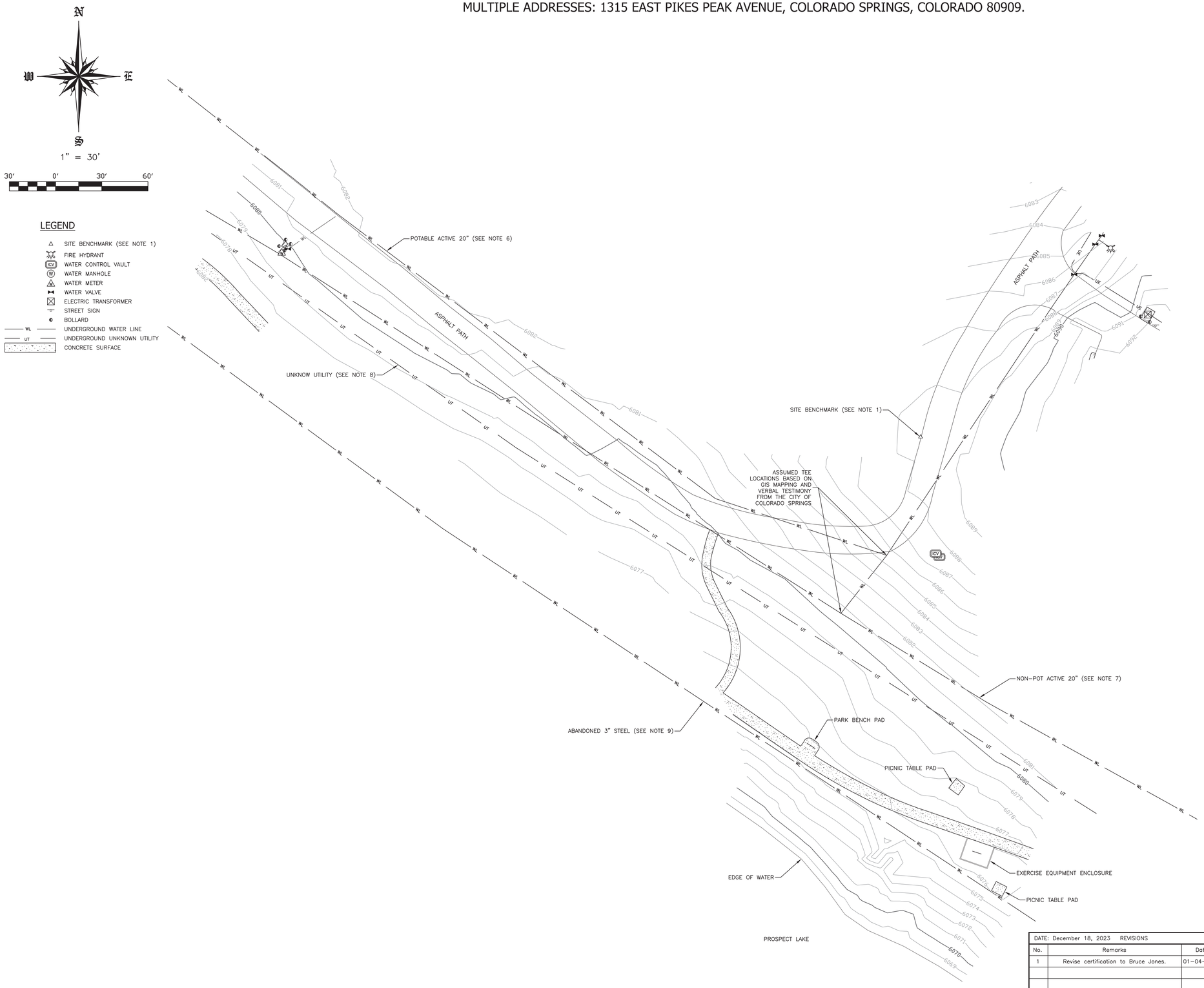

NOTES:

1) Bench Mark: Set No.4 Rebar as shown hereon. Elevation = 6088.71' (Assumed).
2) No research was performed for easements or rights of way.
3) El Paso County Schedule No.: Rec#6417400001
4) Address: Multiple Addresses: 1315 East Pikes Peak Avenue, Colorado Springs, Colorado, 80909
5) This is a topographic exhibit. It is not a Land Survey Plat or Improvement Survey Plat.
6) Potable active 20" per Alan Shanchez with City of Colorado Springs, witched by Alan Sanchez.
7) Non-Potable 20" per Alan Sanchez with City of Colorado Springs, located and witched by private locater, confirmed by Alan Shanchez.
8) Unknown utility line, witched by private locater.
9) Abandoned 3" steel per Alan Shanchez with City of Colorado Springs, witched by private locater, confirmed by Alan Shanchez.
10) The fieldwork for this survey was completed on December 12, 2023.

SURVEYORS STATEMENT:

I hereby state to Bruce Jones exclusively that this topographic exhibit is signed and/or sealed by a professional land surveyor representing that the surveying services addressed therein have been performed by the professional land surveyor or under the professional land surveyor in responsible charge. Is in accordance with applicable standards of practice. Is not a guaranty or warranty, either expressed or implied, and have been met to the best of his professional knowledge, information, and belief.

COLORADO LICENSED
DANNY RODIC
38759
01-04-2024
PROFESSIONAL LAND SURVEYOR

Danny Rodic
Colorado Professional Land Surveyor No. 38759
For and on behalf of Apex Land Surveying and Mapping LLC

DATE: December 18, 2023 REVISIONS

No.	Remarks	Date	By
1	Revise certification to Bruce Jones.	01-04-2024	DDR

Field: TJM Drawn: TJM Checked: DDR

APEX Land Surveying and Mapping LLC.

6130 Spurwood Drive
Colorado Springs, CO 80918
Phone: 719-318-0377
E-mail: info@apexsurveyor.com
Website: www.apexsurveyor.com

PROJECT No.: 23086

PROSPECT LAKE PUMPHOUSE

1315 E COSTILLA STREET
COLORADO SPRINGS, CO 80910

LEGEND

SD	STORM DRAINAGE
W	WATER SERVICE
G	GAS
S	SANITARY SEWER
E	POWER ELECTRICAL
	DITCH / FLOWLINE
	GRADING LIMIT
	GRADE SLOPE
	PROPERTY LINE
	CENTERLINE
	SAWCUT

SITE MAP

UTILITY PURVEYORS

ELECTRICITY: COLORADO SPRINGS UTILITIES
1521 SOUTH HANCOCK EXPRESSWAY
COLORADO SPRINGS, CO 80903
719-668-8259

WATER: COLORADO SPRINGS UTILITIES
1521 SOUTH HANCOCK EXPRESSWAY
COLORADO SPRINGS, CO 80903
719-668-8259

SHEET INDEX

C-0.1	TITLE SHEET
C-0.2	NOTES SHEET
C-3.1	SITE UTILITY PLAN
C-4.1	DETAIL SHEET

DIG ALERT

DIGALERT
DIAL TOLL FREE
811 OR
(1-800-422-4133)
AT LEAST TWO DAYS
BEFORE YOU DIG
UNDERGROUND SERVICE ALERT

PRIOR TO COMMENCING OF ANY EXCAVATION, DIGGING, POT HOLING, ETC. CALL DIG ALERT FOR ASSIGNMENT OF AN INQUIRY ID NUMBER, BECAUSE NO EARTH WORK SHALL COMMENCE UNLESS THE CONTRACTOR HAS OBTAINED THIS AND EACH UTILITY OR OWNER OF SUBSURFACE FACILITIES HAS LOCATED AND MARKED THEIR SUBSURFACE FACILITIES IN THE AREA OF WORK.

STANDARD ABBREVIATIONS

AC	ASPHALTIC CONCRETE	IE	INVERT ELEVATION
BLDG	BUILDING	INV	INVERT
BCR	BEGIN CURB RETURN	LA	LANDSCAPE AREA
BVC	BEGIN VERTICAL CURVE	NG	NATURAL GRADE
BW	BOTTOM OF WALL	PA	PLANTER AREA
CB	CATCH BASIN	PCC	PORTLAND CEMENT CONCRETE
C/L	CENTERLINE	P/L	PROPERTY LINE
CMU	CONCRETE MASONRY UNIT	POC	POINT OF CONNECTION
CONC	CONCRETE	PS	PARKING STRIPE
DW	DRIVEWAY	PVC	POLYVINYL CHLORIDE
ECR	END CURB RETURN	RW	RIGHT OF WAY
EG	EXISTING GRADE	SD	STORM DRAIN
EP	EDGE OF PAVEMENT	SG	SUB-GRADE ELEVATION
EVC	END VERTICAL CURVE	SS	SANITARY SEWER
FF	FINISHED FLOOR	TC	TOP OF CURB, CONCRETE
FG	FINISHED GRADE	TF	TOP OF FOOTING
FH	FIRE HYDRANT	TG	TOP OF GRATE
FL	FLOW LINE	TW	TOP OF WALL
FS	FINISHED SURFACE	VC	VERTICAL CURVE
GB	GRADE BREAK		

VICINITY MAP

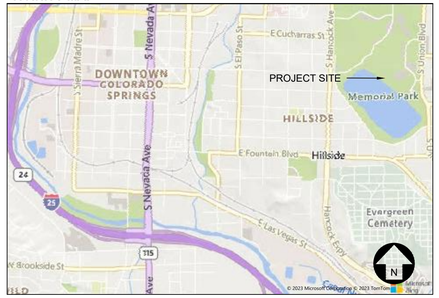

SURVEY NOTES

EXISTING TOPOGRAPHIC AND BOUNDARY INFORMATION SHOWN HEREON PER SURVEY BY APEX LAND SURVEYING AND MAPPING, LLC DATED DECEMBER 18, 2023.

BENCHMARK: SET NO. 4 REBAR AS SHOWN HEREON. ELEVATION= 6088.71' (ASSUMED).

SURVEY MONUMENT PROTECTION:

PROTECT AND PRESERVE, IN PLACE, ALL SURVEY MONUMENTS AND BENCHMARKS. DO NOT DISTURB, MOVE, OR RELOCATE MONUMENTS OR BENCHMARKS WITHOUT THE PRIOR REVIEW AND APPROVAL BY THE AGENCY HAVING JURISDICTION OVER THE MONUMENT OR BENCHMARK. THE CONTRACTOR SHALL CONTRACT WITH A LICENSED SURVEYOR FOR MONUMENTS REQUIRING DISTURBANCE OR REMOVAL, AND THE SURVEYOR SHALL RESET THE MONUMENTS OR PROVIDE PERMANENT WITNESS MONUMENTS AND FILE THE REQUIRED DOCUMENTATION WITH THE AUTHORITY HAVING JURISDICTION, PURSUANT TO ALL APPLICABLE BUSINESS AND PROFESSIONAL CODES.

GRADING INFORMATION

CUT QUANTITY: 0 CUBIC YARDS
FILL QUANTITY: 20 CUBIC YARDS
NET QUANTITY: 20 CUBIC YARDS IMPORT

*NOTE: THE ABOVE QUANTITIES ARE FOR PLANNING AND PERMITTING PURPOSES ONLY. SHRINKAGE; CONSOLIDATION AND SUBSIDENCE FACTORS; LOSSES DUE TO CLEARING AND DEMOLITION OPERATIONS; AND TRENCHING FOR UTILITIES AND FOUNDATIONS ARE NOT INCLUDED. ESTIMATED EARTHWORK QUANTITIES ARE BASED ON THE APPROXIMATE DIFFERENCE BETWEEN EXISTING GRADES AND PROPOSED FINISHED GRADES OR PAVEMENT SUBGRADES, AS INDICATED ON THE PLANS, AND SHOULD VARY ACCORDING TO THESE FACTORS AND LOSSES. THE CONTRACTOR SHALL PERFORM AN EARTHWORK ESTIMATE FOR THE PURPOSE OF PREPARING A LUMP SUM BID PRICE FOR EARTHWORK. THE BID PRICE SHALL INCLUDE COSTS FOR ANY NECESSARY IMPORT AND PLACEMENT OF EARTH MATERIALS OR THE EXPORT AND PROPER DISPOSAL OF EXCESS EARTH MATERIALS.

OWNER/DEVELOPER PLAN APPROVAL

THE UNDERSIGNED OWNER/DEVELOPER AGREES THAT THEY SHALL, AT THEIR EXPENSE, BE SOLELY RESPONSIBLE FOR 1) THE INSTALLATION OF THE PROPOSED UTILITY INFRASTRUCTURE IN ACCORDANCE WITH THESE PLANS, AND 2) ALL DAMAGES AND DEFECTS ARISING FROM, OR RELATED TO, THE INSTALLATION, MAINTENANCE OR OPERATION OF THE PUBLIC UTILITY INFRASTRUCTURE FROM THE DATE OF PRELIMINARY ACCEPTANCE FOR A PERIOD OF TWO YEARS, OR UNTIL FINAL ACCEPTANCE, WHICHEVER IS LATER.

THE UNDERSIGNED UNDERSTANDS THAT ALL PRIVATE UTILITY INFRASTRUCTURE, AS INDICATED ON THESE PLANS, SHALL REMAIN THE PROPERTY OF THE OWNER AND SHALL BE MAINTAINED BY THE OWNER, AS REQUIRED BY *COLORADO SPRINGS UTILITIES' LINE EXTENSION AND SERVICE STANDARDS.*

☐ **PUBLIC WATER MAIN PROPOSED** ☐ **PUBLIC WASTEWATER MAIN PROPOSED** ☒ **PRIVATE WATER SERVICE LINE (<4") AND/OR PRIVATE WASTEWATER SERVICE LINE (<8")**
☐ **PRIVATE WATER MAIN PROPOSED** ☐ **PRIVATE WASTEWATER MAIN PROPOSED**

SIGNED: Erik Rodriguez — OWNER/DEVELOPER
Erik Rodriguez — OWNER/DEVELOPER (PRINT NAME)
DATE: 2/9/2024

DBA: City of Colorado Springs Parks Recreation and Cultural Services
ADDRESS: 1401 Recreation Way
Colorado Springs, CO 80905
PHONE: 719-385-6512
EMAIL: Erik.Rodriguez@coloradosprings.gov

FIMS MAP NUMBER: I-35
TAX SCHEDULE NO.: 6417400001
PRESSURE ZONE: HIGHLINE
STATIC PRESSURE AT MDD: NA
UTILITY DESIGN CAD FILE NO.:
UAP FILE NO: NA
DEVELOPMENT PLAN NO.: NA
APPROVAL DATE: NA
PLAT REC. NO.: NA
PUBLIC UTILITY EASEMENT REC. NO:
NOTICE OF PRIVATE WASTEWATER SYSTEM REC. NO.:
NOTICE OF PRIVATE WATER SYSTEM REC. NO.:

COLORADO SPRINGS UTILITIES
COMMERCIAL UTILITY SERVICE DESIGN APPROVAL

APPROVED
02/16/2024 9:23:03 AM
malcuran
Utility Service
Colorado Springs Utilities
It's how we're all connected

PROJECT NUMBER: 2024-C1002
CSU SHEET 1 OF 4

APPROVAL EXPIRES ONE (1) YEAR FROM THE DATE ABOVE AND RESUBMITTAL OF THESE PLANS FOR REVIEW AND APPROVAL IS REQUIRED IF CONSTRUCTION DOES NOT BEGIN DURING THIS PERIOD.

Plan Prepared By:
Ashley&Vance ENGINEERING, INC.
9555 Ralston Road, Suite 201
Arvada, CO 80004
(303) 755-0762
www.ashleyvance.com
CIVIL • STRUCTURAL

The use of these plans and specifications shall be restricted to the original site for which they were prepared and publication thereof is expressly limited to such use. Reproduction or publication by any method, in whole or in part, is prohibited. Title to these plans and specifications remain with Ashley & Vance Engineering, Inc. without prejudice. Visual contact with these plans and specifications shall constitute prima facie evidence of the acceptance of these restrictions.

Engineer of Record:

COLORADO LICENSED
CORY R. QUINTANA
25996
PROFESSIONAL ENGINEER

PROSPECT LAKE PUMPHOUSE
1315 E COSTILLA STREET
COLORADO SPRINGS, CO 80910

Revisions:
1 .
2 .
3 .
4 .
5 .

Project Engineer: BRJ		Ext: 121	
Project Manager: BRJ			
Date: 2.06.2024		Scale: PER PLAN	
AV Job No: 221742		Sheet Size: 24" x 36"	

TITLE SHEET

C-0.1

C:\Users\Bruce\AppData\Local\Temp\AcPublish_27304\C-0 TITLE SHEET.dwg, C-0.1, Feb 06, 2024 11:51am, Bruce

UTILITY SERVICE PLAN NOTES

THE CONTRACTOR SHALL NOTIFY COLORADO SPRINGS UTILITIES' INSPECTIONS OFFICE 719-668-4658 A MINIMUM OF 48 HOURS PRIOR TO THE START OF CONSTRUCTION.

GENERAL:

1. ALL CONSTRUCTION METHODS AND MATERIALS SHALL MEET *COLORADO SPRINGS UTILITIES' WASTEWATER AND WATER LINE EXTENSION AND SERVICE STANDARDS (WATER/WASTEWATER LESS).*
2. COLORADO SPRINGS UTILITIES DOES NOT GUARANTEE THE ACCURACY OF LOCATIONS OF EXISTING PIPELINES, MANHOLES, HYDRANTS, VALVES AND SERVICE LINES. IF FIELD CONDITIONS ARE FOUND TO BE DIFFERENT THAN SHOWN ON THE PLANS, THE CONTRACTOR SHALL NOTIFY THE INSPECTOR AND THE DESIGN ENGINEER IMMEDIATELY.
3. THE CONTRACTOR IS RESPONSIBLE FOR ANY DAMAGE TO ANY UTILITY FACILITIES AS A RESULT OF HIS ACTIONS. THE CONTRACTOR SHALL MAKE ALL THE REQUIRED REPAIRS IMMEDIATELY TO THE SATISFACTION OF COLORADO SPRINGS UTILITIES.
4. ALL FIELD STAKING SHALL COMPLY WITH THE *WATER/WASTEWATER LESS.*
5. CORROSION PROTECTION MEASURES SHALL COMPLY WITH THE *WATER/WASTEWATER LESS.*
6. FINAL LOCATION OF ALL WASTEWATER AND WATER SERVICES SHALL BE APPROVED IN THE FIELD BY THE COLORADO SPRINGS UTILITIES INSPECTOR.
7. ALL TRENCH BACKFILL AND COMPACTION SHALL BE IN ACCORDANCE WITH SECTION 206 OF THE *CITY OF COLORADO SPRINGS STANDARD SPECIFICATIONS MANUAL AND SECTION 5.18 OF THE WATER LESS.*

WASTEWATER:

1. SERVICE STUBS SHALL BE INSTALLED A MINIMUM OF SEVEN FEET (7') INTO THE PROPERTY, UNLESS OTHERWISE SHOWN, AND THE END OF THE STUB SHALL BE MARKED WITH A 2"X4"X12' STEEL OR WOODEN POST.
2. SERVICES SHALL BE CONNECTED A MINIMUM OF FIVE FEET (5') FROM THE OUTSIDE EDGE OF ANY MANHOLE ON THE MAIN LINE AND SHALL MAINTAIN TWO FEET (2') OF SEPARATION BETWEEN TAPS CENTER TO CENTER.
3. ALL CLEANOUTS SHALL BE THE SAME SIZE AS THE SERVICE LINE.
4. THE CONTRACTOR SHALL NOTIFY EL PASO COUNTY DEPARTMENT OF HEALTH AND ENVIRONMENT WHEN ANY SEPTIC TANK IS TO BE ABANDONED AND PAY ALL FEES NECESSARY TO OBTAIN A PERMIT.

WATER:

1. SERVICE STUBS SHALL BE INSTALLED WITH THE CURB STOP AT OR NEAR PROPERTY LINE AND SHALL NOT BE INSTALLED WITHIN DRIVEWAYS OR SIDEWALKS (SEE DETAIL DRAWING B2-3).
2. SERVICE TAPS SHALL BE MADE A MINIMUM OF THREE FEET (3') FROM THE BELL OR APPURTENANCE ON THE WATER MAIN. TAPS SHALL BE A MINIMUM OF THREE FEET (3') APART ON THE SAME SIDE OF THE WATER MAIN AND A MINIMUM OF ONE-AND-A-HALF FEET (1.5') WHEN TAPS ARE MADE ON OPPOSITE SIDES OF THE WATER MAIN.
3. ALL SERVICES FOR COMMERCIAL USE AND SOME RESIDENTIAL USES REQUIRE INSTALLATION OF A BACKFLOW PREVENTION ASSEMBLY IMMEDIATELY AFTER THE METER. THE BACKFLOW PREVENTION ASSEMBLY SHALL BE APPROVED BY THE FOUNDATION FOR CROSS-CONNECTION CONTROL AND HYDRAULIC RESEARCH OF THE UNIVERSITY OF SOUTHERN CALIFORNIA (USC-FCCCHR) AND INSTALLED IN ACCORDANCE WITH THIS LISTING. PLEASE REFERENCE THE WATER LINE EXTENSION STANDARDS FOR ADDITIONAL REQUIREMENTS.
4. ALL TAPS ON COLORADO SPRINGS UTILITIES WATER MAINS SHALL BE PERFORMED BY COLORADO SPRINGS UTILITIES. ALL OTHER TAPS SHALL BE PERFORMED BY THE CONTRACTOR.
5. ANY ABANDONED SERVICES MUST BE PHYSICALLY DISCONNECTED AT THE MAIN. ANY NECESSARY REPAIRS TO THE MAIN AND/OR SHUT DOWN OF THE TAPPING VALVE SHALL BE AS DIRECTED BY COLORADO SPRINGS UTILITIES.
6. ALL WATER SERVICE LINES SHOULD ENTER THE BUILDING WITHIN 5 FEET OF AN EXTERIOR WALL. EXPOSED WATER PLUMBING SHALL BE MINIMIZED INSIDE THE BUILDING PRIOR TO THE WATER METER AND/OR APPROVED BACKFLOW PREVENTION ASSEMBLY OR METHOD.
7. ALL HDPE WATER SERVICE LINES MUST EXTEND A MINIMUM OF 6 INCHES ABOVE THE FLOOR AND BE 90 DEGREES FROM THE FLOOR PLAN TO ALLOW FOR BRACING AND TRANSITION TO THE METER LOOP ASSEMBLY.

3.

4.

GENERAL NOTES:

1. ALL CONSTRUCTION SHALL BE IN ACCORDANCE WITH THE 2017 PIKES PEAK REGIONAL BUILDING CODE AND THE CURRENT EDITION OF THE INTERNATIONAL BUILDING CODE.
2. IN THE EVENT OF A CONFLICT BETWEEN ANY REFERENCED STANDARD, THE MORE STRINGENT REQUIREMENT SHALL GOVERN.
3. A COPY OF THESE APPROVED PLANS MUST BE ON THE JOB SITE WHENEVER CONSTRUCTION IS IN PROGRESS.
4. BEFORE BEGINNING WORK, CONTRACTOR SHALL CONFIRM WITH AGENCIES HAVING JURISDICTION THAT ALL REQUIRED PERMITS AND LICENSES HAVE BEEN OBTAINED AND ALL REQUIRED NOTICES GIVEN.
5. UNDERGROUND AND OVERHEAD CONSTRUCTION IN ADDITION TO WHAT IS SHOWN ON THESE PLANS MAY BE PART OF THIS PROJECT, INCLUDING ARCHITECTURAL AND LANDSCAPE ARCHITECTURAL IMPROVEMENTS. ADDITIONAL PERMITS MAY BE REQUIRED.
   A. CONTRACTOR SHALL BE RESPONSIBLE FOR COORDINATING WORK AND INTERFACING IMPROVEMENTS WITH WORK BY OTHER CONTRACTORS AT THIS JOB SITE AND WITH IMPROVEMENTS REQUIRED BY PLANS BY OTHERS.
   B. CONTRACTOR SHALL REFER TO ARCHITECTURAL PLANS FOR BUILDING AND SITE LAYOUT DIMENSIONING.
   C. CONTRACTOR SHALL REFER TO ARCHITECTURAL AND LANDSCAPE ARCHITECTURAL PLANS AND SPECIFICATIONS FOR SITE DEVELOPMENT CONSTRUCTION DETAILS AND DIMENSIONING, INCLUDING THOSE FOR BUILDINGS, PATIOS, WALKWAYS, DRIVEWAYS, WALLS/FENCES, PLUMBING, ELECTRICAL, UTILITIES, LANDSCAPING, AND IRRIGATION.
7. ALL SITE WORK AND TESTING SHALL BE DONE IN CONFORMANCE WITH THE RECOMMENDATIONS CONTAINED IN THE FOLLOWING GEOTECHNICAL ENGINEERING REPORT FOR THIS PROJECT:
   A. PREPARED BY: TERRACON CONSULTANTS, PROJECT NO. 23225015, DATED APRIL 21, 2022.
   B. THIS REPORT AND ANY ADDENDA SHALL BE INCORPORATED INTO THESE PLANS AND MADE A PART HEREOF AS IF SPELLED OUT IN THEIR ENTIRETY HEREON. IT IS THE CONTRACTOR'S RESPONSIBILITY TO REVIEW THE APPLICABLE GEOTECHNICAL REPORTS. CONTRACTOR SHALL CONTACT THE GEOTECHNICAL ENGINEER TO OBTAIN OR REVIEW COPIES OF THESE REPORTS AND ADDENDA.
   C. PRIOR TO BIDDING, CONTRACTOR SHALL CONTACT THE GEOTECHNICAL ENGINEER TO DETERMINE THE LOCATION AND DEPTH OF ALL TEST BORINGS AND EXPLORATORY PITS AND EXCAVATIONS. CONTRACTOR SHALL DETERMINE FROM THE GEOTECHNICAL ENGINEER WHAT REMEDIAL WORK IS RECOMMENDED TO MAKE THESE DISTURBED LOCATIONS SUITABLE FOR THE PROPOSED IMPROVEMENTS. CONTRACTOR SHALL INCLUDE IN HIS BID ALL COSTS FOR THE RECOMMENDED REMEDIAL WORK AND SHALL ADJUST HIS OPERATIONS TO PROPERLY SEQUENCE THE WORK TO ACCOMMODATE REMEDIAL WORK WITH CONSTRUCTION OF PROPOSED IMPROVEMENTS.
8. ALL MATERIALS AND CONSTRUCTION SHALL BE IN ACCORDANCE WITH APPLICABLE HEALTH AND SAFETY LAWS, ORDINANCES, REGULATIONS, RULES, AND STANDARDS INCLUDING ALL REQUIREMENTS OF COLORADO DEPARTMENT OF PUBLIC HEALTH & ENVIRONMENT AND OSHA.
9. ALL UNSUITABLE CONSTRUCTION MATERIALS AND RUBBISH AND DEBRIS SHALL BE REMOVED FROM THE JOB SITE; TRANSPORTED TO A SUITABLE LOCATION, AND DISPOSED OF IN A PROPER AND LEGAL MANNER.
10. ALL WORK INVOLVING EXCAVATION, INCLUDING THAT FOR WATER, SEWER, STORM DRAIN AND UTILITY CONDUITS AND ALL SERVICE CONNECTIONS AND METER BOXES (NOT PERMITTED IN DRIVEWAYS) SHALL BE COMPLETED AND OBSERVED AND APPROVED BY THE AGENCY HAVING JURISDICTION AND THE STRUCTURAL BACKFILL OBSERVED AND TESTED FOR COMPACTION AND APPROVED BY THE GEOTECHNICAL ENGINEER BEFORE AGGREGATE BASE, PAVING AND OTHER PERMANENT SURFACE CONSTRUCTION MAY COMMENCE.
11. BEFORE COMMENCING EXCAVATION, CONTRACTOR SHALL CONTACT PUBLIC WORKS AND UTILITY COMPANIES OR OTHER OWNERS OF SUBSURFACE FACILITIES WITHIN THE WORK SITE AND SHALL VERIFY WHETHER OR NOT A REPRESENTATIVE WILL BE PRESENT BEFORE AND/OR DURING EXCAVATION, AND SHALL DETERMINE SITE SPECIFIC REQUIREMENTS FOR EXCAVATION.
12. CONTRACTOR SHALL NOTIFY PUBLIC WORKS, BUILDING AND SAFETY, UTILITY COMPANIES, GEOTECHNICAL ENGINEER, AND ENGINEER OF RECORD, AT LEAST 48 HOURS BEFORE START OF ANY CONSTRUCTION AND OF THE TIME AND LOCATION OF PRE-CONSTRUCTION CONFERENCE, AND SHALL DETERMINE FROM EACH PARTY THEIR SCOPE OF WORK TO BE OBSERVED AND BY WHOM, AND SCOPE OF TESTING. DURING THE COURSE OF WORK, CONTRACTOR SHALL BE RESPONSIBLE FOR CALLING FOR OBSERVATION AND TESTING AS STIPULATED PURSUANT TO ABOVE DETERMINATIONS. WORK NOT OBSERVED AND TESTED WILL BE SUBJECT TO REJECTION.
13. CONTRACTOR SHALL FURNISH, INSTALL, AND MAINTAIN SUCH SHEETING, SHORING, BRACING, AND/OR OTHER PROTECTION AS IS NECESSARY TO PREVENT FAILURE OF TEMPORARY EXCAVATIONS AND EMBANKMENTS AND TO PREVENT DAMAGE TO EXISTING IMPROVEMENTS, TEMPORARY IMPROVEMENTS, AND PARTIALLY COMPLETED PORTIONS OF THE WORK. CONTRACTOR SHALL BE SOLELY RESPONSIBLE FOR THE SUFFICIENCY OF SUCH SUPPORTS AND/OR OTHER PROTECTION PER ALL REQUIREMENTS OF COLORADO DEPARTMENT OF PUBLIC HEALTH & ENVIRONMENT AND OSHA.
14. CONTRACTOR SHALL PROMPTLY NOTIFY ENGINEER OF RECORD AND AUTHORITY HAVING JURISDICTION BY TELEPHONE AND IN WRITING UPON DISCOVERY OF, AND BEFORE DISTURBING ANY PHYSICAL CONDITIONS DIFFERING FROM THOSE REPRESENTED BY APPROVED PLANS AND SPECIFICATIONS.
15. CONTRACTOR SHALL MAINTAIN A COMPLETE AND ACCURATE RECORD OF ALL CHANGES OF CONSTRUCTION FROM THAT SHOWN ON THESE PLANS AND SPECIFICATIONS FOR THE PURPOSE OF PROVIDING A BASIS FOR CONSTRUCTION OF RECORD DRAWINGS. NO CHANGES SHALL BE MADE WITHOUT PRIOR WRITTEN APPROVAL OF ENGINEER OF RECORD AND AUTHORITY HAVING JURISDICTION. UPON COMPLETION OF THE PROJECT, CONTRACTOR SHALL DELIVER THIS RECORD OF ALL CONSTRUCTION CHANGES TO ENGINEER ALONG WITH A LETTER WHICH DECLARES THAT, OTHER THAN THESE NOTED CHANGES, "THE PROJECT WAS CONSTRUCTED IN CONFORMANCE WITH THE APPROVED PLANS AND SPECIFICATIONS."
    WARNING: ENGINEER PREPARING THESE PLANS WILL NOT BE RESPONSIBLE FOR, OR LIABLE FOR, UNAUTHORIZED CHANGES TO OR USES OF THESE PLANS. ALL CHANGES TO THESE PLANS MUST BE APPROVED IN WRITING BY PREPARER.
16. CONTRACTOR AGREES THAT, IN ACCORDANCE WITH GENERALLY ACCEPTED CONSTRUCTION PRACTICES, CONTRACTOR WILL BE REQUIRED TO ASSUME SOLE AND COMPLETE RESPONSIBILITY FOR JOB SITE CONDITIONS DURING THE COURSE OF CONSTRUCTION OF THIS PROJECT INCLUDING SAFETY OF ALL PERSONS AND PROPERTY, THAT THIS REQUIREMENT SHALL BE MADE TO APPLY CONTINUOUSLY AND NOT BE LIMITED TO NORMAL WORKING HOURS. CONTRACTOR FURTHER AGREES TO DEFEND, INDEMNIFY AND HOLD DESIGN PROFESSIONALS HARMLESS FROM ALL LIABILITY AND CLAIMS, REAL OR ALLEGED, IN CONNECTION WITH THE PERFORMANCE OF WORK ON THIS PROJECT AND ACCEPTS LIABILITY ARISING FROM THE SOLE NEGLIGENCE OF DESIGN PROFESSIONALS.
17. CONTRACTOR SHALL BE SOLELY RESPONSIBLE FOR VEHICULAR AND PEDESTRIAN TRAFFIC CONTROL AND SAFETY AND SHALL FURNISH, INSTALL, AND MAINTAIN SUCH FENCING, SIGNS, LIGHTS, TRENCH PLATES, BARRICADES, AND/OR OTHER PROTECTION AS IS NECESSARY FOR SAID CONTROL AND SAFETY.
18. CONTRACTOR AGREES TO ASSUME SOLE AND COMPLETE RESPONSIBILITY FOR PROTECTION OF PUBLIC AND PRIVATE PROPERTY AT OR IN THE VICINITY OF THE JOB SITE AND FURTHER AGREES TO, AT CONTRACTOR'S EXPENSE, REPAIR OR REPLACE TO ORIGINAL CONDITION, ALL EXISTING IMPROVEMENTS WITHIN OR IN THE VICINITY OF THE JOB SITE WHICH ARE NOT DESIGNATED FOR REMOVAL AND WHICH ARE DAMAGED OR REMOVED AS A RESULT OF CONTRACTOR'S OPERATIONS.

DEMOLITION NOTES:

1. THE EXISTENCE AND APPROXIMATE LOCATIONS OF ANY UNDERGROUND UTILITIES OR STRUCTURES SHOWN ON THESE PLANS ARE OBTAINED BY THE AVAILABLE RECORDS PROVIDED. THE CIVIL ENGINEER ASSUMES NO LIABILITY AS TO THE EXACT LOCATION OF SAID LINES, NOR FOR UTILITY OR IRRIGATION LINES WHOSE LOCATIONS ARE NOT SHOWN. THE CONTRACTOR SHALL BE RESPONSIBLE FOR NOTIFYING ALL UTILITY COMPANIES PRIOR TO WORK OR POTHOLE TO DETERMINE THE EXACT LOCATIONS OF ALL LINES AFFECTING THIS WORK, WHETHER OR NOT SHOWN HEREON. THE CONTRACTOR SHALL BE RESPONSIBLE FOR ANY DAMAGE TO OR PROTECTION OF ALL EXISTING UTILITY LINES.
2. THE CONTRACTOR IS RESPONSIBLE FOR THE DEMOLITION OF THE SITE AND SHALL REMOVE AND DISPOSE OF ALL STRUCTURES ABOVE AND OR BELOW GROUND UNLESS NOTED OTHERWISE. ANY HAZARDOUS MATERIALS ENCOUNTERED SHALL BE HANDLED AND REMOVED AS REQUIRED BY LOCAL AND/OR STATE LAWS AT NO COST TO THE OWNER.
3. THE CONTRACTOR SHALL EXERCISE DUE CARE TO AVOID DAMAGE TO EXISTING HARDSCAPE IMPROVEMENTS, UTILITY FACILITIES, AND LANDSCAPING FEATURES THAT ARE NOT AFFECTED BY THESE PLANS.
4. ALL JOIN LINES SHALL BE SAWCUT ON A NEAT, STRAIGHT LINE PARALLEL WITH THE JOIN. THE CUT EDGE SHALL BE PROTECTED FROM CRUSHING, AND ALL BROKEN EDGES SHALL BE RE-CUT PRIOR TO JOINING.
5. ALL EXISTING OBJECTIONABLE MATERIALS THAT CONFLICT WITH PROPOSED IMPROVEMENTS INCLUDING, BUT NOT LIMITED TO, BUILDING FOUNDATIONS, UTILITIES, APPURTENANCES, TREES, SIGNS, STRUCTURES, ETC. SHALL BE REMOVED AND DISPOSED BY THE CONTRACTOR AT NO COST TO THE OWNER, UNLESS NOTED OTHERWISE HEREIN, OR AS DIRECTED BY THE CONSTRUCTION MANAGER.
6. THE CONTRACTOR SHALL PROTECT ALL EXISTING STREETS FROM DAMAGES CAUSED BY HIS OPERATIONS. ANY CURBS DAMAGED DURING HIS OPERATIONS SHALL BE SAWCUT AND REPLACED AT NO COST TO THE OWNER. ANY EXISTING PAVING IDENTIFIED AS POTENTIALLY NEEDING TO BE REPLACED SHALL BE BROUGHT TO THE ATTENTION OF THE OWNER'S REPRESENTATIVE PRIOR TO THE COMMENCEMENT OF WORK.
7. THE CONTRACTOR SHALL PERFORM AND BE RESPONSIBLE FOR ALL CLEARING AND GRUBBING OPERATIONS AS NECESSARY TO COMPLETE THE WORK, INCLUDING TRANSPORTATION AND DISPOSAL OF ALL REMOVED MATERIALS, AND ALL ASSOCIATED COSTS.

GENERAL GRADING NOTES:

1. GRADING SHALL BE IN CONFORMANCE WITH RECOMMENDATIONS MADE BY THE GEOTECHNICAL ENGINEER DURING OBSERVATION AND TESTING OF SITE DEMOLITION, PREPARATION, GRADING, AND DEVELOPMENT WORK. FOR ANY CONFLICT BETWEEN THESE PLANS AND THE RECOMMENDATIONS AND/OR SPECIFICATIONS OF THE GEOTECHNICAL ENGINEER, THE MORE STRINGENT PROVISION SHALL GOVERN.
2. AREAS TO BE GRADED SHALL BE CLEARED OF ALL VEGETATION (EXCEPT TREES INDICATED TO REMAIN), INCLUDING ROOTS AND ROOT STRUCTURES, OTHER ORGANIC MATERIAL, DEBRIS, NON-COMPLYING FILL, AND OTHER MATERIAL UNSUITABLE FOR SUPPORT OF FILL AND/OR PROPOSED IMPROVEMENTS, AS RECOMMENDED BY AND UNDER THE OBSERVATION AND TESTING OF THE GEOTECHNICAL ENGINEER. CALL THE INSPECTOR FOR INITIAL INSPECTION.
3. ALL UNSUITABLE SOIL MATERIALS AND RUBBISH AND DEBRIS RESULTING FROM DEMOLITION AND GRADING OPERATIONS SHALL BE REMOVED FROM THE JOB SITE; TRANSPORTED TO A SUITABLE LOCATION AND DISPOSED OF IN A PROPER AND LEGAL MANNER.
4. AREAS TO RECEIVE FILL MATERIAL AND AREAS TO RECEIVE BUILDINGS, EXTERIOR SLABS, WALKWAYS, WALLS, PAVEMENT AND OTHER STRUCTURAL IMPROVEMENTS SHALL BE PREPARED AS RECOMMENDED BY AND UNDER THE OBSERVATION AND TESTING OF THE GEOTECHNICAL ENGINEER. RECOMMENDATIONS FOR OVER EXCAVATION, ADDITIONAL SCARIFICATION, BACKFILL AND RECOMPACTION ARE CONTAINED IN THE PROJECT GEOTECHNICAL REPORT REFERENCED IN THE GENERAL NOTES ON THESE PLANS.
5. PRIOR TO PLACEMENT OF FILL AND BACKFILL MATERIAL, THE PREPARED AREA SHALL BE INSPECTED AND APPROVED BY THE INSPECTOR. THE GEOTECHNICAL ENGINEER SHALL ALSO OBSERVE THE AREAS TO BE FILLED. ALLOW A MINIMUM 48-HOUR NOTICE. FILL AND BACKFILL PLACED ON THE PREPARED AREA WITHOUT THE REQUIRED OBSERVATION SHALL BE REMOVED.
6. ALL FILL MATERIAL, WHETHER EXCAVATED ON-SITE OR IMPORTED FROM OFF-SITE, SHALL BE TESTED AND APPROVED BY THE GEOTECHNICAL ENGINEER PRIOR TO PLACEMENT. IMPORTED FILL MATERIAL SHALL BE EQUAL TO OR BETTER IN QUALITY THAN THE ON-SITE SOILS AND SHALL CONFORM TO THE RECOMMENDATION OF THE GEOTECHNICAL ENGINEER. THE GEOTECHNICAL ENGINEER SHALL TEST AND APPROVE THE SOIL PROPOSED FOR IMPORT FOR STRUCTURAL FILL PRIOR TO IMPORTATION TO THE SITE. THE LANDSCAPE ARCHITECT AND THE GEOTECHNICAL ENGINEER SHALL TEST AND APPROVE THE SOIL PROPOSED FOR IMPORT FOR LANDSCAPE AREA SURFACE MATERIAL PRIOR TO IMPORTATION TO THE SITE.
7. CONTRACTOR SHALL REFER TO THE FOLLOWING AS APPLICABLE:
   - ARCHITECT'S PLANS FOR ADDITIONAL GRADING REQUIREMENTS IN BUILDING AREAS.
   - LANDSCAPE ARCHITECT'S PLANS FOR TREE PRESERVATION REQUIREMENTS AND FOR SUBGRADE ALLOWANCES IN LANDSCAPE AREAS.
   - PUBLIC IMPROVEMENT PLANS FOR INTERFACING WITH PUBLIC GRADING, PAVING, STORM DRAINAGE AND UTILITY IMPROVEMENTS.
8. WHERE PLANTER AREAS ARE SHOWN ON THE PLANS ADJACENT TO BUILDINGS AND ARE CONTAINED BY WALKS / FLATWORK LESS THAN 8" BELOW BOTTOM OF SILL PLATE OR WHERE ADJACENT FINISH GRADE OUTSIDE A BUILDING IS SHOWN TO BE LESS THAN 8" BELOW BOTTOM OF SILL PLATE, IT IS THE CONTRACTOR'S RESPONSIBILITY TO VERIFY THAT BUILDING PLANS CALL FOR APPROPRIATE DAMPPROOF OR WATERPROOF CONSTRUCTION AND IS CONSTRUCTED IN ACCORDANCE WITH ALL BUILDING APPLICABLE CODE REQUIREMENTS.
9. PLAN ELEVATIONS SHOWN ON SOIL AND LANDSCAPED AREAS ARE FINISH GRADE (FINISH SURFACE) ELEVATIONS INTENDED TO ESTABLISH SURFACE DRAINAGE CONTROL FOR THESE AREAS. DURING GRADING OPERATIONS, THICKNESSES (SUBGRADE ALLOWANCES) SPECIFIED BY LANDSCAPE ARCHITECT FOR TURF, WOOD CHIPS, MULCH, ETC. SHALL BE SUBTRACTED FROM THESE ELEVATIONS TO ESTABLISH FINISH SUBGRADE.
10. BEFORE PLACEMENT OF AGGREGATE BASE OR SUBBASE MATERIAL IN PAVEMENT AREAS, THE SUBGRADE SOIL SHALL BE REVIEWED AND TESTED BY THE GEOTECHNICAL ENGINEER. DURING PAVING OPERATIONS, STRUCTURAL SECTION COMPACTION SHALL BE OBSERVED AND TESTED BY THE GEOTECHNICAL ENGINEER.
11. QUALITY REVIEW AND REPORTING REQUIREMENTS.
    A. GRADING AND IMPROVEMENTS FOUND NOT IN CONFORMANCE WITH APPROVED PLANS AND DESIGN INTENT SHALL BE CORRECTED BY CONTRACTOR AT CONTRACTOR'S EXPENSE. ADDITIONAL SURVEYING TO CONFIRM ELEVATIONS AFTER CORRECTIVE MEASURES SHALL ALSO BE AT CONTRACTOR'S EXPENSE.

    REQUIREMENTS FOR VARIOUS SURFACING CONDITIONS ARE AS FOLLOWS:

    - DIRT: NOT LESS THAN 2% (1/4" PER FOOT) SLOPE IN DIRECTION OF SURFACE DRAINAGE AND 0.10 FOOT MAXIMUM DEVIATION FROM DESIGN ELEVATION AT ANY LOCATION
    - A.C. PAVEMENT: NOT LESS THAN 1% (1/8 INCH PER FOOT) SLOPE IN DIRECTION OF SURFACE DRAINAGE AND 0.04 FOOT MAXIMUM DEVIATION FROM DESIGN ELEVATION AT ANY LOCATION
    - CONCRETE: NOT LESS THAN 0.5% (1/16 INCH PER FOOT) SLOPE IN DIRECTION OF SURFACE DRAINAGE AND 0.02 FOOT MAXIMUM DEVIATION FROM DESIGN ELEVATION AT ANY LOCATION UNLESS NOTED OTHERWISE ON PLANS.

TRENCHING AND BACKFILL NOTES:

1. ALL TRENCHING, BEDDING AND BACKFILL MATERIAL AND CONSTRUCTION, SHALL BE IN ACCORDANCE WITH THESE PLANS INCLUDING THE PIPE TRENCH DETAIL.
2. TRENCH OR STRUCTURE EXCAVATION SUBGRADE SHALL BE OBSERVED BY THE GEOTECHNICAL ENGINEER PRIOR TO PLACEMENT OF BEDDING MATERIAL OR FORMS. WET OR UNSTABLE SOIL ENCOUNTERED IN THE BOTTOM OF THE EXCAVATION AND DEEMED BY THE GEOTECHNICAL ENGINEER TO BE INCAPABLE OF PROPERLY SUPPORTING THE PIPE OR STRUCTURE BEING CONSTRUCTED, SHALL BE REMOVED TO THE DEPTH RECOMMENDED BY THE GEOTECHNICAL ENGINEER AND THE EXCAVATION BACKFILLED TO THE BOTTOM OF THE PIPE OR STRUCTURE GRADE WITH SUITABLE MATERIAL RECOMMENDED BY THE GEOTECHNICAL ENGINEER.
3. WATER ENCOUNTERED IN TRENCH OR STRUCTURE EXCAVATION SHALL BE REMOVED BY THE CONTRACTOR TO THE SATISFACTION OF THE GEOTECHNICAL ENGINEER TO PROVIDE DRY CONDITIONS DURING CONSTRUCTION OF PIPE OR STRUCTURE.
4. BEDDING AND BACKFILL MATERIAL AND COMPACTED DENSITY, SHALL BE TESTED FOR COMPLIANCE WITH APPLICABLE REQUIREMENTS BY THE GEOTECHNICAL ENGINEER.
5. BEDDING AND PIPE ZONE BACKFILL MATERIAL, SHALL BE COMPACTED TO NOT LESS THAN 95% OF MAXIMUM DENSITY. TRENCH BACKFILL SHALL BE COMPACTED TO NOT LESS THAN 90% OF MAXIMUM DENSITY. THE UPPER 12" BELOW THE BASE OR SUB-BASE COURSE IN PAVED AND OTHER TRAFFIC AREAS AND BELOW THE CONCRETE OR SAND COURSE IN WALKWAY AREAS SHALL BE COMPACTED TO NOT LESS THAN 95% OF MAXIMUM DENSITY. BACKFILL COMPACTION SHALL BE TESTED FOR COMPLIANCE WITH THESE REQUIREMENTS IN ACCORDANCE WITH ASTM D-1557, LATEST REVISION, AND REPORTED BY THE GEOTECHNICAL ENGINEER.
6. CLASS I OR CLASS II (TRENCH) BACKFILL SHALL NOT BE PLACED UNTIL BEDDING AND INITIAL (PIPE ZONE) BACKFILL HAVE BEEN OBSERVED, TESTED AND APPROVED.
7. COMPACTION BY FLOODING OR JETTING IS NOT PERMITTED.
8. CONTRACTOR SHALL REVIEW THE GEOTECHNICAL REPORT(S), THE PROJECT WORK AREA AND VICINITY, AND SHALL FAMILIARIZE HIMSELF WITH THE WORK AREA CONDITIONS. CONTRACTOR SHALL MAKE HIS OWN DEDUCTIONS AND CONCLUSIONS AS TO HOW EXISTING SURFACE AND SUB-SURFACE CONDITIONS WILL AFFECT OR BE AFFECTED BY HIS CONSTRUCTION OPERATIONS, INCLUDING THE NATURE OF MATERIALS TO BE EXCAVATED. THE DEGREE OF DIFFICULTY ASSOCIATED WITH MAKING AND MAINTAINING THE REQUIRED EXCAVATIONS, AND THE DEGREE OF DIFFICULTY WHICH MAY ARISE FROM SUBSURFACE CONDITIONS INCLUDING GROUNDWATER, AND SHALL ACCEPT FULL RESPONSIBILITY THEREOF.
9. IT IS THE CONTRACTOR'S RESPONSIBILITY TO PROTECT THE INTEGRITY OF EXISTING PAVEMENT ALONG AND BEHIND THE TRENCH SAWCUT LINES DURING CONSTRUCTION. IF THIS PAVEMENT IS BROKEN-OFF OR OTHERWISE DAMAGED BEFORE NEW PAVEMENT IS PLACED, CONTRACTOR SHALL SAWCUT A NEW CONFORM LINE PARALLEL WITH, FULL LENGTH OF, AND SUFFICIENT DISTANCE (1-FOOT MINIMUM) BEHIND ORIGINAL SAWCUT SO AS TO REMOVE DAMAGED PAVEMENT AND / OR IRREGULARITY ALONG THE CONFORM LINE.

CONCRETE PAVEMENT AND APPURTENANT CONCRETE NOTES:

1. UNLESS MODIFIED OR OTHERWISE SPECIFIED BY THE CONSTRUCTION NOTES THAT FOLLOW HEREON INCLUDING THOSE UNDER SEPARATE HEADINGS, PRIVATE ROADWAY MATERIALS AND CONSTRUCTION SHALL BE IN ACCORDANCE WITH THE CITY OF COLORADO SPRINGS STANDARD SPECIFICATIONS SECTION 500 CONCRETE.
2. COMPACTION OF FILL, SUBGRADE AND BASE COURSES AS WELL AS ALL TRENCH BEDDING AND BACKFILL SHALL BE OBSERVED AND TESTED FOR COMPLIANCE WITH APPLICABLE REQUIREMENTS BY THE GEOTECHNICAL ENGINEER.
3. CONCRETE SHALL MEET REQUIREMENTS OF A MINIMUM 28 DAY COMPRESSIVE STRENGTH OF 4000 PSI, MAXIMUM WATER/CEMENT RATIO BY WEIGHT OF 0345, AND MINIMUM CEMENT CONTENT PER CUBIC YARD OF 564 POUNDS.
4. PORTLAND CEMENT SHALL CONFORM TO THE SPECIFICATIONS FOR PORTLAND CEMENT (ASTM C-150) AND SPECIFICATIONS FOR AIR-ENTRAINED PORTLAND CEMENT (ASTM C-175 OR C-595) AND SHALL BE TYPE IIA (AIR-ENTRAINING) CEMENT, UNLESS SULFATE CONDITIONS ALLOW OTHERWISE. TABLE 2.2.3 IN CHAPTER 2.2 OF ACI 201 PRESENTS CEMENT RECOMMENDATIONS FOR SULFATE RESISTANCES. IN ADDITION TO THE STANDARD CHEMICAL REQUIREMENTS FOR PORTLAND CEMENT IN ASTM C-150, THE MAXIMUM PERCENT OF ALKALIES SHALL BE AS SPECIFIED IN TABLE 2 OF ASTM C-150 FOR LOW ALKALI CEMENT.
5. FINE AGGREGATE SHALL CONFORM TO ASTM C-33. FINE AGGREGATE SHALL CONSIST OF SAND OR OTHER INERT MATERIALS, OR COMBINATIONS THEREOF APPROVED BY THE ENGINEER, AND HAVING HARD, STRONG, DURABLE PARTICLES, FREE FROM ADHERENT COATING. FINE AGGREGATE SHALL BE THOROUGHLY WASHED TO REMOVE SHALE, COAL, MICA, CLAY, LOAM, ALKALI, ORGANIC MATTER OR OTHER DELETERIOUS MATTER. FINE AGGREGATE SHALL BE REGULARLY GRADED AND WHEN TESTED BY MEANS OF THE U.S. STANDARD, SIEVES SHALL CONFORM TO THE FOLLOWING REQUIREMENTS EXPRESSED AS PERCENTAGES BY WEIGHT:

SIEVE SIZE	PERCENT PASSING
3/8"	100
No 4	95-100
No 8	80-100
No 16	50-85
No 30	25-60
No 50	5-30
No 100	0-10
No 200	0-3

6. COARSE AGGREGATE SHALL CONFORM TO ASTM C33. COARSE AGGREGATE SHALL CONSIST OF GRAVEL, CRUSHED STONE, OR OTHER INERT MATERIAL OR COMBINATIONS THEREOF APPROVED BY THE ENGINEER, AND HAVING HARD, STRONG, DURABLE PIECES FREE FROM ADHERENT COATING. COARSE AGGREGATE SHALL BE THOROUGHLY WASHED OF CLAY, LOAM, BARK, STICKS, ALKALI, ORGANIC MATTER, SHALE, COAL, MICA, OR OTHER DELETERIOUS MATERIAL. Coarse AGGREGATE SHALL BE REGULARLY GRADED AND WHEN TESTED BY MEANS OF THE U.S. STANDARD, SIEVES SHALL CONFORM TO THE FOLLOWING REQUIREMENTS EXPRESSED AS PERCENTAGES BY WEIGHT:

SIEVE SIZE	PERCENT PASSING
1"	100
3/4"	90-100
3/8"	30-65
No 4	0-10
No 8	0-5

7. REINFORCING FIBER SHALL BE TYPE III CONFORMING TO ASTM C1116.
8. REINFORCING STEEL SHALL BE GRADE 60 BILLET STEEL CONFORMING TO ASTM A 615. STEEL BENDING PROCESS SHALL CONFORM TO THE REQUIREMENTS OF MANUAL OF STANDARD PRACTICE OF THE CONCRETE REINFORCING STEEL INSTITUTE. BENDING OR STRAIGHTENING SHALL BE ACCOMPLISHED SO THAT THE STEEL WILL NOT BE DAMAGED. KINKED BARS SHALL NOT BE USED.
9. JOINTS IN CONCRETE PAVEMENT
   A. WEAKENED PLANE CRACK CONTROL (CONTRACTION) JOINTS SHALL BE CONSTRUCTED AT REGULAR INTERVALS NOT EXCEEDING 10-FEET EACH WAY (LONGITUDINAL AND TRANSVERSE) AND AT ADDITIONAL LOCATIONS AS MAY BE CALLED FOR IN THE FIELD. JOINTS SHALL BE CONSTRUCTED PER SUBSECTION 303-5.4.2 OF THE SSPWC AS MODIFIED BY THE PLAN DETAILS AND THESE NOTES. REINFORCEMENT SHALL BE CONTINUOUS THROUGH JOINTS. DEPTH OF JOINTS SHALL BE 1/4 SLAB THICKNESS + 1/2-INCH (I.E., 2-INCHES FOR 6-INCH SLAB). JOINTS SHALL BE CONSTRUCTED BY SAWCUTTING GROOVES AS SOON AS CONCRETE HAS HARDENED SUFFICIENTLY TO PERMIT SAWING WITHOUT RAVELING (USUALLY 4 TO 24 HOURS AFTER PLACEMENT). JOINTS SHALL BE FILLED WITH JOINT SEALANT (SIKAFLEX-2CNS OR EQUIVALENT, COLOR LIMESTONE GRAY) AS SOON AFTER COMPLETION OF THE CURING PERIOD AS IS FEASIBLE AND BEFORE PAVEMENT IS OPENED TO TRAFFIC. JOINTS SHALL BE CLEANED OF ALL FOREIGN MATERIAL, INCLUDING MEMBRANE CURING COMPOUNDS, AND SHALL BE SURFACE-DRY WHEN SEALANT IS INSTALLED. JOINT LOCATIONS SHALL BE ADJUSTED AS NECESSARY TO ALIGN WITH THOSE ALREADY CONSTRUCTED IN EXISTING ADJACENT (CONTIGUOUS) FEATURES SUCH AS CURBS AND GUTTERS. ALONG CURVES, TRANSVERSE JOINTS SHALL BE RADIAL.
   B. EXPANSION JOINTS SHALL BE CONSTRUCTED AT LOCATIONS CALLED FOR ON THE PLANS. JOINTS SHALL BE CONSTRUCTED PER SUBSECTION 303-5.4.2 AS MODIFIED BY THE PLAN DETAILS AND THESE NOTES. JOINTS SHALL BE CONSTRUCTED 1/2-INCH WIDE USING ONE PIECE OF PREFORMED JOINT FILLER INSTALLED FROM BOTTOM OF SLAB TO WITHIN 1" OF CONCRETE SURFACE. THE RESULTING RESERVOIR SHALL BE FILLED WITH JOINT SEALANT TO WITHIN ¼" OF CONCRETE SURFACE AS SOON AFTER COMPLETION OF THE CURING PERIOD AS IS FEASIBLE AND BEFORE PAVEMENT IS OPENED TO TRAFFIC. JOINTS SHALL BE CLEANED OF ALL FOREIGN MATERIAL, INCLUDING MEMBRANE CURING COMPOUND, AND SHALL BE SURFACE-DRY WHEN SEALANT IS INSTALLED. REINFORCING BARS SHALL BE INTERRUPTED 3 INCHES CLEAR OF EXPANSION JOINTS AND MINIMUM 14-INCH LONG SMOOTH DOWELS INSTALLED ACROSS, AND CENTERED ON, THE JOINT. DOWEL DIAMETER SHALL BE 1/8 SLAB THICKNESS (I.E., 1" FOR 8" SLAB, 3/4" FOR 6" SLAB). ONE-HALF (ONE END) OF THE DOWEL SHALL BE INSTALLED WITHIN A "SPEED DOWEL" TUBE WITH A 1-INCH GAP BETWEEN THE END OF THE DOWEL AND THE SEALED END OF THE TUBE. DOWELS SHALL BE INSTALLED AT 12 INCHES ON CENTER HORIZONTALLY, CENTERED IN THE SLAB VERTICALLY, AND A MINIMUM OF 3 INCHES CLEAR OF ANY REBAR. JOINT LOCATIONS SHALL BE ADJUSTED AS NECESSARY TO ALIGN WITH THOSE ALREADY CONSTRUCTED IN EXISTING ADJACENT (CONTIGUOUS) FEATURES SUCH AS CURBS AND GUTTERS. ALONG CURVES, TRANSVERSE JOINTS SHALL BE RADIAL.
13. JOINTS IN CURBS, GUTTERS AND WALKS
    A. TRANSVERSE WEAKENED PLANE CRACK CONTROL JOINTS SHALL BE CONSTRUCTED AT REGULAR INTERVALS NOT EXCEEDING 10-FEET, DIRECTLY ABOVE DRAIN PIPES THAT OUTLET THROUGH CURB AND AT ADDITIONAL LOCATIONS AS MAY BE CALLED FOR ON THE PLANS. JOINTS SHALL BE CONSTRUCTED PER SUBSECTION 303-5.4.3 PARAGRAPH B OF THE SSPWC AS MODIFIED BY THE PLAN DETAILS AND THESE NOTES. REINFORCEMENT SHALL BE CONTINUOUS THROUGH JOINTS. JOINT LOCATIONS SHALL BE ADJUSTED AS NECESSARY TO ALIGN WITH THOSE ALREADY CONSTRUCTED IN EXISTING ADJACENT (CONTIGUOUS) FEATURES. ALONG CURVES AND WALK RETURNS, JOINTS SHALL BE RADIAL.
    B. TRANSVERSE EXPANSION JOINTS SHALL BE CONSTRUCTED AT BCR, ECR, AND AT REGULAR INTERVALS NOT EXCEEDING 30-FEET; ALONG EDGES OF DRIVEWAYS, WHEELCHAIR RAMPS, AND FIXED OBJECTS AND STRUCTURES (FIRE HYDRANT, LIGHT STANDARD, UTILITY POLE, DRAIN INLET, MANHOLE OR VALVE COVER, SCREEN/RETAINING WALL, BUILDING WALL, ETC.); AT ADDITIONAL LOCATIONS AS MAY BE CALLED FOR ON THE PLANS. EXPANSION JOINTS SHALL NOT BE CONSTRUCTED IN CROSS OR VALLEY GUTTER WHICH IS SEPARATE FROM CURB. JOINTS SHALL BE CONSTRUCTED PER SUBSECTION 303-5.4.2 OF THE SSPWC AS MODIFIED BY THE PLAN DETAILS AND THESE NOTES. JOINTS SHALL BE CONSTRUCTED 3/8-INCH WIDE USING ONE PIECE OF PREFORMED JOINT FILLER INSTALLED FORM BOTTOM OF SLAB TO WITHIN 1-INCH OF CONCRETE SURFACE. THE RESULTING RESERVOIR SHALL BE FILLED WITH JOINT SEALANT TO WITHIN 1/4-INCH OF CONCRETE SURFACE AS SOON AFTER COMPLETION OF THE CURING PERIOD AS IS POSSIBLE. JOINTS SHALL BE CLEANED OF ALL FOREIGN MATERIAL, INCLUDING MEMBRANE CURING COMPOUNDS, AND SHALL BE SURFACE-DRY WHEN SEALANT IS INSTALLED. LONGITUDINAL REINFORCING BARS SHALL BE INTERRUPTED 3 INCHES CLEAR OF EXPANSION JOINTS AND MINIMUM 14-INCH LONG #5 SMOOTH DOWELS INSTALLED ACROSS, AND CENTERED ON, THE JOINT. ONE-HALF (ONE END) OF THE DOWEL SHALL BE INSTALLED WITHIN A "SPEED DOWEL" TUBE WITH A 1-INCH GAP BETWEEN THE END OF THE DOWEL AND THE SEALED END OF THE TUBE. DOWELS SHALL BE CENTERED VERTICALLY IN THE CONCRETE AND A MINIMUM OF 3 INCHES CLEAR HORIZONTALLY OF ANY REBAR. JOINT LOCATIONS SHALL BE ADJUSTED AS NECESSARY TO ALIGN WITH THOSE ALREADY CONSTRUCTED IN EXISTING ADJACENT (CONTIGUOUS) FEATURES. ALONG CURVES AND THROUGH WALK RETURNS, JOINTS SHALL BE RADIAL.
14. APPLY BROOM FINISH TO ALL FLATWORK SURFACES IN CONFORMANCE WITH ACI 301. PROVIDE FINE OR MEDIUM-COARSE TEXTURE AND COARSENESS.
15. ALL EXISTING AND PROPOSED VALVE AND UTILITY BOXES AND MANHOLE FRAMES AND COVERS SHALL BE ADJUSTED TO FINISH GRADE.
16. AFTER CONSTRUCTION OF CONCRETE PAVEMENT AND APPURTENANT CONCRETE FEATURES, A FLOOD TEST SHALL BE CONDUCTED TO REVIEW SURFACE DRAINAGE, AS FOLLOWS:
    A. WATER SHALL BE SUPPLIED AND DISCHARGED IN SUFFICIENT QUANTITY TO COMPLETELY WET AND COVER ALL PAVEMENT AND CONCRETE GUTTER AREAS; THE OUTLINE LIMITS OF RESIDUAL STANDING/PONDED WATER SHALL THEN BE MARKED
    B. CONCRETE IMPROVEMENTS SHALL BE REMOVED AND REPLACED, AT NO ADDITIONAL COST TO THE OWNER, AS NECESSARY TO PROVIDE POSITIVE SURFACE DRAINAGE AND TO PREVENT PONDING OF WATER ON PAVEMENT SURFACES AND IN GUTTERS
    C. ADDITIONAL FLOOD TESTING SHALL BE CONDUCTED TO CONFIRM SUCCESS OF CORRECTIVE MEASURES.
    D. WHERE SAWCUT LINE IS CONSTRUCTED ALONG CONFORM LINE WITH EXISTING A.C. PAVEMENT, IT IS CONTRACTOR'S RESPONSIBILITY TO PROTECT THE INTEGRITY OF THE PAVEMENT ALONG AND BEHIND THE SAWCUT LINE DURING CONSTRUCTION; IF THIS PAVEMENT IS BROKEN-OFF OR OTHERWISE DAMAGED BEFORE NEW PAVEMENT IS PLACED, CONTRACTOR SHALL SAWCUT A NEW CONFORM LINE PARALLEL WITH, FULL LENGTH OF, AND SUFFICIENT DISTANCE BEHIND ORIGINAL SAWCUT SO AS TO REMOVE DAMAGED PAVEMENT AND/OR IRREGULARITY ALONG THE CONFORM LINE.

USE OF PLANS:

THIS DRAWING IS PROVIDED IN AN ELECTRONIC FORMAT AS A COURTESY, IF REQUESTED BY THE USER. THE DELIVERY OF THE ELECTRONIC FILE DOES NOT CONSTITUTE THE DELIVERY OF OUR PROFESSIONAL WORK PRODUCT. THE SIGNED HARD COPY PREPARED FOR THE PROJECT CONSTITUTES OUR PROFESSIONAL WORK PRODUCT AND THE HARD COPY MUST BE REFERRED TO FOR THE CORRECT DESIGN INFORMATION. THESE PLANS HAVE BEEN PREPARED SOLELY FOR USE FOR THE PROJECT SCOPE AND SITE SPECIFICALLY IDENTIFIED HEREON AT THE TIME THESE PLANS ARE SIGNED. THE ENGINEER PREPARING THESE PLANS WILL NOT BE RESPONSIBLE FOR, OR LIABLE FOR, USE OF ANY PART OF THESE PLANS, INCLUDING ANY NOTE OR DETAIL, FOR ANY UNAPPROVED OR REVISED PROJECT SCOPE, OR FOR ANY OTHER PROJECT AT THIS OR ANY OTHER SITE. USER AGREES TO INDEMNIFY AND HOLD HARMLESS ASHLEY & VANCE FOR ALL COSTS AND DAMAGES IF USED.

USE OF ELECTRONIC INFORMATION:

ELECTRONIC INFORMATION MAY BE PROVIDED BY THE ENGINEER FOR CONVENIENCE; UNDER NO CIRCUMSTANCES SHALL DELIVERY OF ELECTRONIC FILES FOR USE BY OTHERS BE DEEMED A SALE BY THE ENGINEER AND THE ENGINEER MAKES NO WARRANTIES, EITHER EXPRESS OR IMPLIED, OF MERCHANTABILITY AND FITNESS FOR ANY PARTICULAR PURPOSE. IN NO EVENT SHALL THE ENGINEER BE LIABLE FOR INDIRECT OR CONSEQUENTIAL DAMAGES AS A RESULT OF THE USE OR REUSE OF THE ELECTRONIC FILES BY OTHERS.

ELECTRONIC INFORMATION IS INTENDED TO PROVIDE INFORMATION SUPPLEMENTAL AND SUBORDINATE TO THE CONSTRUCTION CONTRACT DOCUMENTS. LAYOUT AND CONSTRUCTION OF PROJECT ELEMENTS SHALL BE BASED ON DIMENSIONS AND INFORMATION INCLUDED ON THE SIGNED AND SEALED CONSTRUCTION CONTRACT DOCUMENTS WHICH SHALL CONTROL OVER ELECTRONIC INFORMATION. USER IS RESPONSIBLE FOR CONFIRMING LOCATION OF PROPOSED IMPROVEMENTS BASED ON DIMENSIONS AND INFORMATION INCLUDED ON THE CONSTRUCTION CONTRACT DOCUMENTS; INCONSISTENCIES BETWEEN THE ELECTRONIC INFORMATION AND THE CONSTRUCTION CONTRACT DOCUMENTS SHALL BE BROUGHT TO THE ATTENTION OF THE ENGINEER FOR RESOLUTION PRIOR TO CONSTRUCTION.

PROJECT ELEMENTS SUCH AS MANHOLES, CATCH BASINS, UTILITY VAULTS, VALVE ASSEMBLIES, STAIRS, RAMPS, WALLS, ETC. ARE SHOWN SCHEMATICALLY IN THE ELECTRONIC INFORMATION AND CONSTRUCTION OF THESE ELEMENTS SHALL BE IN ACCORDANCE WITH THE CONSTRUCTION NOTES AND DETAILS PRESENTED OR REFERENCED IN THE SIGNED AND SEALED CONSTRUCTION CONTACT DOCUMENTS. IMPROVEMENTS CONSTRUCTED BASED ON ELECTRONIC INFORMATION AND IN CONFLICT WITH THE DRAWING DIMENSIONS DETAILS, AND THE CONSTRUCTION CONTRACT DOCUMENTS SHALL BE REMOVED AND CONSTRUCTED IN THE PROPER LOCATION AND DIMENSIONS AT CONTRACTOR'S SOLE EXPENSE.

DIGITAL DRAWINGS ARE TYPICALLY A COMPILATION OF DRAWINGS FROM A NUMBER OF SOURCES AND, AS SUCH, THERE IS INFORMATION IN THE ELECTRONIC FILE ISSUED BY THE ENGINEER THAT WAS NOT DEVELOPED BY THE ENGINEER AND IS NOT AUTHORIZED BY THE ENGINEER FOR USE BY OTHERS. ELECTRONIC INFORMATION PROVIDED BY THE ENGINEER SHALL ONLY BE APPLICABLE FOR IMPROVEMENTS DESIGNED BY THE ENGINEER AND WHICH ARE SPECIFICALLY DESIGNATED BY CONSTRUCTION NOTES AND/OR DETAILS ON THE SIGNED AND SEALED CONTRACT DOCUMENTS.

IF DIGITAL FILES ARE OBTAINED WITH THE INTENT TO USE THEM FOR PROJECT STAKING, THEY SHALL ONLY BE USED BY A QUALIFIED ENGINEER OR LAND SURVEYOR. DIGITAL INFORMATION SHALL ONLY BE USED FOR STAKING HORIZONTAL LOCATION OF PROPOSED IMPROVEMENTS AFTER IT HAS BEEN CONFIRMED WITH THE SIGNED AND SEALED CONSTRUCTION CONTRACT DOCUMENTS.

THE DIGITAL DRAWINGS ARE NOT INTENDED TO BE USED DIRECTLY FOR CONTROL OF CONTRACTOR'S GRADING OPERATIONS WITHOUT STAKING BY ENGINEER OR LAND SURVEYOR. THE INTERSECTION OF PROPOSED CUT AND FILL SLOPES WITH EXISTING GRADE IS APPROXIMATE WHERE SHOWN ON THE DRAWINGS AND SHALL BE CONFIRMED BY FIELD STAKING. IT IS THE CONTRACTOR'S RESPONSIBILITY TO CONSTRUCT SLOPES IN CONFORMANCE WITH THE SPECIFIED AND DETAILED REQUIREMENTS CONTAINED IN THE CONTRACT DOCUMENTS.

COLORADO SPRINGS UTILITIES
COMMERCIAL UTILITY SERVICE DESIGN APPROVAL

APPROVED
02/16/2024 10:14:26 AM
malcuran
Utility Service

Colorado Springs Utilities
It's how we're all connected

PROJECT NUMBER: 2024-C1002
CSU SHEET 2 OF 4

APPROVAL EXPIRES ONE (1) YEAR FROM THE DATE ABOVE AND RESUBMITTAL OF THESE PLANS FOR REVIEW AND APPROVAL IS REQUIRED IF CONSTRUCTION DOES NOT BEGIN DURING THIS PERIOD.

Plan Prepared By:
Ashley & Vance ENGINEERING, INC.
CIVIL • STRUCTURAL
9555 Ralston Road, Suite 201
Arvada, CO 80004
(303) 755-9762
www.ashleyvance.com

The use of these plans and specifications shall be restricted to the original site for which they were prepared and publication thereof is expressly limited to such use. Reproduction or publication by any method, in whole or in part, is prohibited. Title to these plans and specifications remain with Ashley & Vance Engineering, Inc. without prejudice. Visual contact with these plans and specifications shall constitute prima facie evidence of the acceptance of these restrictions.

Engineer of Record:

PROSPECT LAKE PUMPHOUSE
1315 E COSTILLA STREET
COLORADO SPRINGS, CO 80910

Revisions:	
1	.
2	.
3	.
4	.
5	.

Project Engineer: BRJ	Ext: 121
Project Manager: BRJ	
Date: 2.06.2024	Scale: PER PLAN
AV Job No: 221742	Sheet Size: 24" x 36"

NOTES SHEET

C-0.2

C:\Users\Bruce\AppData\Local\Temp\AcPublish_27304\C-0 TITLE SHEET.dwg, C-0.2, Feb 06, 2024 11:51am, Bruce

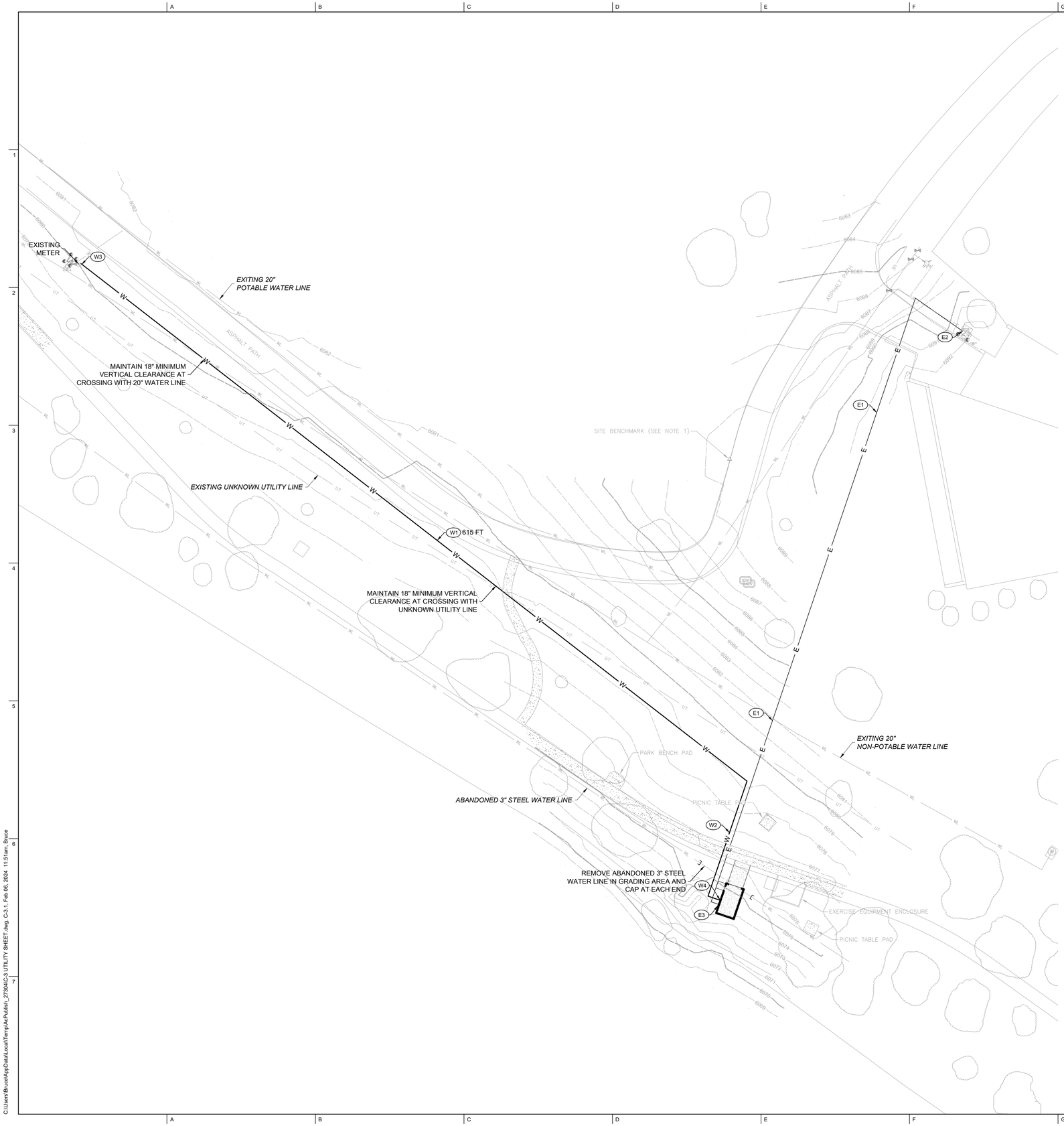

GENERAL NOTES:

ALL EXISTING UTILITIES SHOWN ARE BASED ON THE BEST AVAILABLE INFORMATION. CONTRACTOR TO POTHOLE ALL POINTS OF CONNECTION AND VERIFY ALL CLEARANCES. MATERIAL DEPTH AND LOCATION SHALL BE IDENTIFIED BY CONTRACTOR. IF THERE ARE ANY DIFFERENCES FROM PLAN WITH ANY OF THESE ITEMS, ENGINEER OF WORK SHALL BE NOTIFIED IMMEDIATELY.

WATER CONSTRUCTION NOTES:

- W1 INSTALL 1-1/2 INCH CTS HDPE DR-9 WATER LATERAL PER DETAIL 4, SHEET C-4.1.
- W2 INSTALL 1-1/2 INCH CTS HDPE DR-9 WATER LATERAL IN JOINT TRENCH WITH ELECTRICAL SERVICE PER DETAIL 5, SHEET C-4.1.
- W3 INSTALL 1-1/2 INCH WATER SERVICE CONNECTION TO EXISTING IRRIGATION LINE PER DETAIL 6, SHEET C-4.1.
- W4 INSTALL WATER CONNECTION TO STRUCTURE PER PLUMBING PLANS.

ELECTRICAL NOTES:

- E1 ELECTRICAL SERVICE CONDUIT, SIZE PER ELECTRICAL PLANS. FINAL DESIGN WILL BE DETERMINED BY SPRINGS UTILITIES FIELD ENGINEERING.
- E2 CONNECT TO EXISTING TRANSFORMER PER ELECTRICAL PLANS. FINAL DESIGN WILL BE DETERMINED BY SPRINGS UTILITIES FIELD ENGINEERING.
- E3 CONNECT TO PROPOSED STRUCTURE PER ELECTRICAL PLANS. FINAL DESIGN WILL BE DETERMINED BY SPRINGS UTILITIES FIELD ENGINEERING.

DIGALERT
DIAL TOLL FREE **811** OR (1-800-422-4133) AT LEAST TWO DAYS BEFORE YOU DIG
UNDERGROUND SERVICE ALERT

HORIZONTAL SCALE: 1" = 30'
30 0 30 60

COLORADO SPRINGS UTILITIES
COMMERCIAL UTILITY SERVICE DESIGN APPROVAL

APPROVED
02/16/2024 10:14:19 AM
malcuran
Utility Service
Colorado Springs Utilities
It's how we're all connected

PROJECT NUMBER: 2024-C1002
CSU SHEET 3 OF 4

APPROVAL EXPIRES ONE (1) YEAR FROM THE DATE ABOVE AND RESUBMITTAL OF THESE PLANS FOR REVIEW AND APPROVAL IS REQUIRED IF CONSTRUCTION DOES NOT BEGIN DURING THIS PERIOD.

Plan Prepared By:
Ashley&Vance ENGINEERING, INC.
9555 Ralston Road, Suite 201
Arvada, CO 80004
(303) 755-0762
www.ashleyvance.com
CIVIL • STRUCTURAL

The use of these plans and specifications shall be restricted to the original site for which they were prepared and publication thereof is expressly limited to such use. Reproduction or publication by any method, in whole or in part, is prohibited. Title to these plans and specifications remain with Ashley & Vance Engineering, Inc. without prejudice. Visual contact with these plans and specifications shall constitute prima facie evidence of the acceptance of these restrictions.

Engineer of Record:

COLORADO LICENSED
BRUCE R. QUINTANA
PROFESSIONAL ENGINEER
25996

PROSPECT LAKE PUMPHOUSE

1315 E COSTILLA STREET
COLORADO SPRINGS, CO 80910

Revisions:
1 .
2 .
3 .
4 .
5 .

Project Engineer: BRJ	Ext: 121
Project Manager: BRJ	
Date: 2.06.2024	Scale: PER PLAN
AV Job No: 221742	Sheet Size: 24" x 36"

UTILITY PLAN

C-3.1

C:\Users\Bruce\AppData\Local\Temp\AcPublish_27304\C-3 UTILITY SHEET.dwg, C-3.1, Feb 06, 2024 11:51am, Bruce

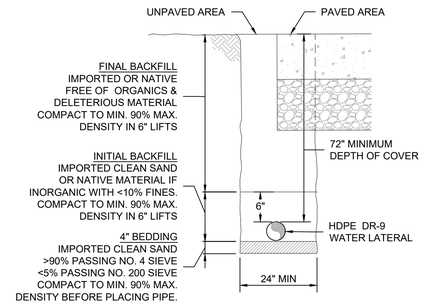

4 WATER TRENCH SECTION

NTS

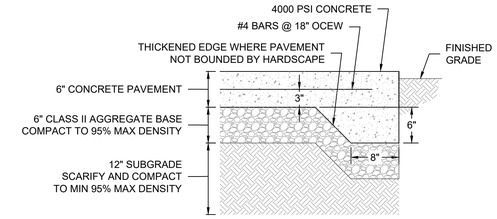

ACTUAL THICKNESS OF CONCRETE AND AGGREGATE BASE SHALL BE DETERMINED DURING CONSTRUCTION BY THE GEOTECHNICAL ENGINEER.

1 TYPICAL CONCRETE DRIVEWAY SECTION

NTS

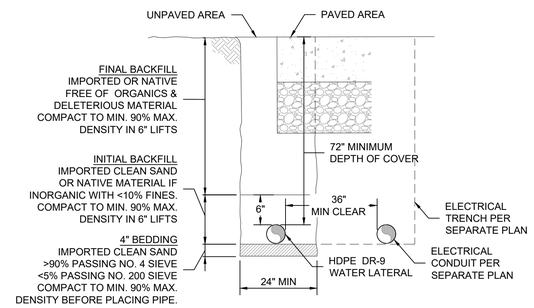

5 WATER AND ELECTRICAL TRENCH SECTION

NTS

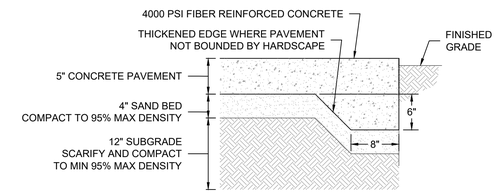

ACTUAL THICKNESS OF CONCRETE AND AGGREGATE BASE SHALL BE DETERMINED DURING CONSTRUCTION BY THE GEOTECHNICAL ENGINEER.

2 TYPICAL CONCRETE WALKWAY SECTION

NTS

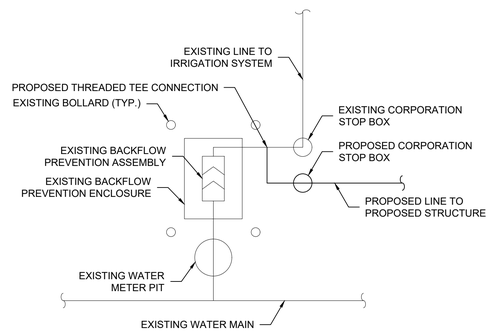

6 IRRIGATION CONNECTION DETAIL

NTS

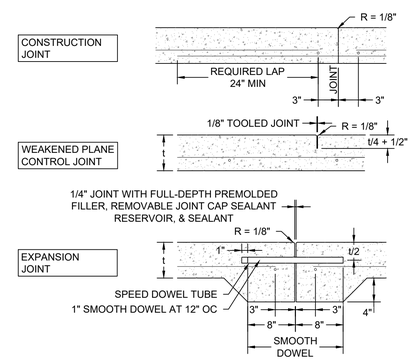

3 CONCRETE JOINT DETAILS

NTS

COLORADO SPRINGS UTILITIES
COMMERCIAL UTILITY SERVICE DESIGN APPROVAL

APPROVED
02/16/2024 10:14:08 AM
malcuran
Utility Service

Colorado Springs Utilities
It's how we're all connected

PROJECT NUMBER: 2024-C1002

CSU SHEET 4 OF 4

APPROVAL EXPIRES ONE (1) YEAR FROM THE DATE ABOVE AND RESUBMITTAL OF THESE PLANS FOR REVIEW AND APPROVAL IS REQUIRED IF CONSTRUCTION DOES NOT BEGIN DURING THIS PERIOD.

Plan Prepared By:

Ashley&Vance ENGINEERING, INC.

9555 Ralston Road, Suite 201
Arvada, CO 80004
(303) 755-0762
www.ashleyvance.com

CIVIL • STRUCTURAL

The use of these plans and specifications shall be restricted to the original site for which they were prepared and publication thereof is expressly limited to such use. Reproduction or publication by any method, in whole or in part, is prohibited. Title to these plans and specifications remain with Ashley & Vance Engineering, Inc. without prejudice. Visual contact with these plans and specifications shall constitute prima facie evidence of the acceptance of these restrictions.

Engineer of Record:

COLORADO LICENSED
B. R. QUINTANA
25196
PROFESSIONAL ENGINEER

PROSPECT LAKE PUMPHOUSE

1315 E COSTILLA STREET
COLORADO SPRINGS, CO 80910

Revisions:

1	.
2	.
3	.
4	.
5	.

Project Engineer: BRJ	Ext: 121
Project Manager: BRJ	
Date: 2.06.2024	Scale: PER PLAN
AV Job No: 221742	Sheet Size: 24" x 36"

DETAIL SHEET

C-4.1

C:\Users\Bruce\AppData\Local\Temp\AcPublish_27304\C-4 DETAIL SHEET.dwg, C-4.1, Feb 06, 2024 11:52am, Bruce

TOPOGRAPHIC EXHIBIT

PROSPECT LAKE PUMPHOUSE

MULTIPLE ADDRESSES: 1315 EAST PIKES PEAK AVENUE, COLORADO SPRINGS, COLORADO 80909.

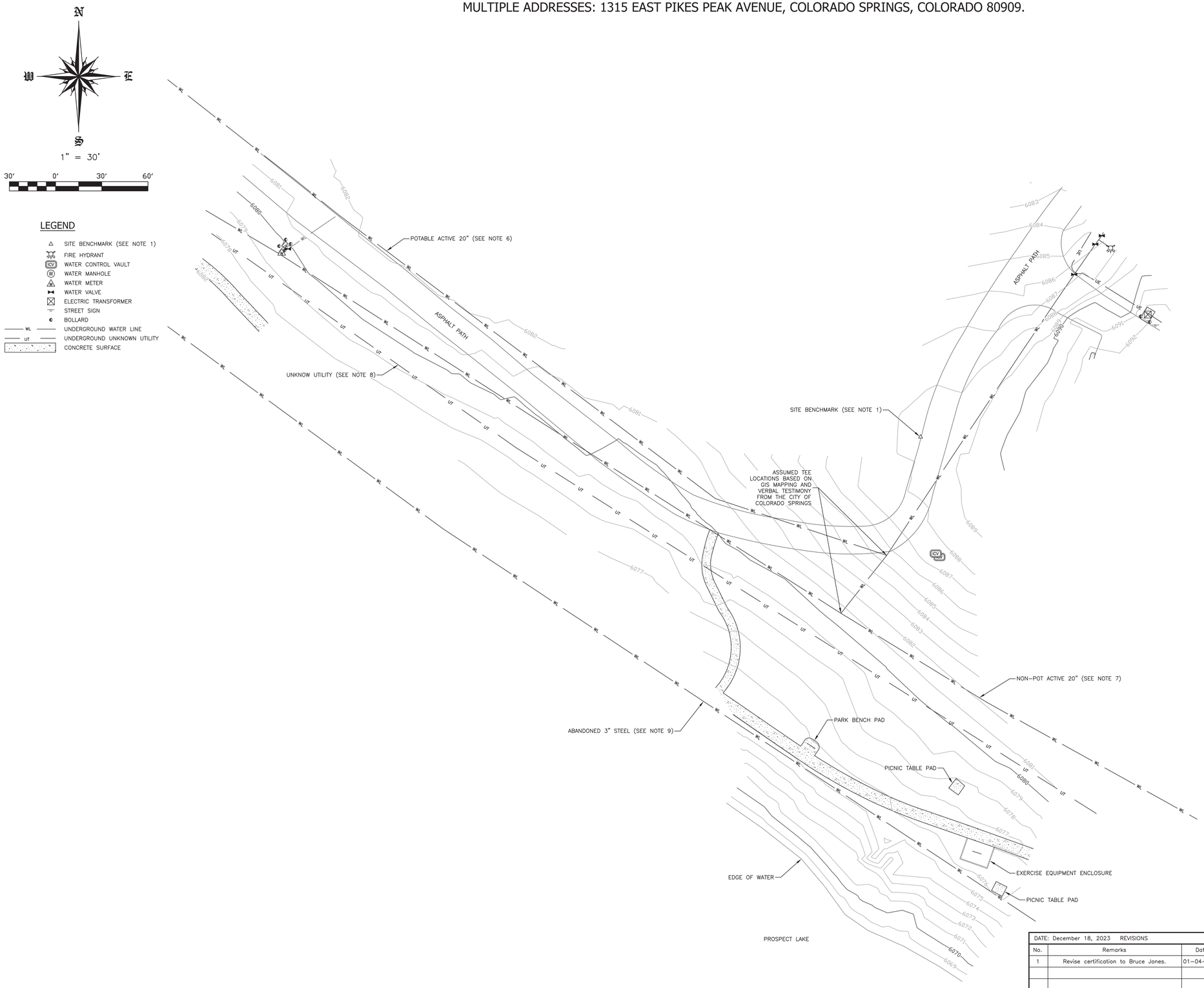

NOTES:

1) Bench Mark: Set No.4 Rebar as shown hereon. Elevation = 6088.71' (Assumed).
2) No research was performed for easements or rights of way.
3) El Paso County Schedule No.: Rec#6417400001
4) Address: Multiple Addresses: 1315 East Pikes Peak Avenue, Colorado Springs, Colorado, 80909
5) This is a topographic exhibit. It is not a Land Survey Plat or Improvement Survey Plat.
6) Potable active 20" per Alan Shanchez with City of Colorado Springs, witched by Alan Sanchez.
7) Non-Potable 20" per Alan Sanchez with City of Colorado Springs, located and witched by private locater, confirmed by Alan Shanchez.
8) Unknown utility line, witched by private locater.
9) Abandoned 3" steel per Alan Shanchez with City of Colorado Springs, witched by private locater, confirmed by Alan Shanchez.
10) The fieldwork for this survey was completed on December 12, 2023.

SURVEYORS STATEMENT:

I hereby state to Bruce Jones exclusively that this topographic exhibit is signed and/or sealed by a professional land surveyor representing that the surveying services addressed therein have been performed by the professional land surveyor or under the professional land surveyor in responsible charge. Is in accordance with applicable standards of practice. Is not a guaranty or warranty, either expressed or implied, and have been met to the best of his professional knowledge, information, and belief.

COLORADO LICENSED
DANNY RODIC
38759
01-04-2024
PROFESSIONAL LAND SURVEYOR

Danny Rodic
Colorado Professional Land Surveyor No. 38759
For and on behalf of Apex Land Surveying and Mapping LLC

DATE: December 18, 2023 REVISIONS

No.	Remarks	Date	By
1	Revise certification to Bruce Jones.	01-04-2024	DDR

Field: TJM Drawn: TJM Checked: DDR

APEX Land Surveying and Mapping LLC.

6130 Spurwood Drive
Colorado Springs, CO 80918
Phone: 719-318-0377
E-mail: info@apexsurveyor.com
Website: www.apexsurveyor.com

PROJECT No.: 23086

PROSPECT LAKE EQUIPMENT BUILDING

COLORADO SPRINGS, CO

JUST ARCHITECTURE & DESIGN
PHONE: (720) 323-1493
email: kyle@justarchitectureanddesign.com
9815 Westbury Ct. Highlands Ranch, CO 80129

ABBREVIATIONS

#	Pound OR Number	FM	Filled Metal	PLUMB	Plumbing
&	And	FO	Face Of	PLY	Plywood
@	At	FND	Foundation	PT	Pressure Treated
ACT	Acoustic Ceiling Tile	FR	Fire	PNT	Paint or Painted
AD	Area Drain	FRP	Fiber Reinforced Plastic	PVC	Polyvinyl Chloride
AFF	Above Finished Floor	FT	Foot	RB	Rubber Base
ALUM	Aluminum	GA	Gauge	RCP	Reflected Ceiling Plan
ANOD	Anodized	GALV	Galvanized	RD	Roof Drain
BSMT	Basement	GC	General Contractor	REQD	Required
BYND	Beyond	GL	Glazing or Glass	RM	Room
BOT	Bottom	GP BD	Gypsum Wall Board	RO	Rough Opening
CAB	Cabinet	GWB	Gypsum Wall Board	ROW	Right of Way
CIP	Cast In Place	HB	Hose Bib	SIM	Similar
CHNL	Channel	HC	Hollow Core	SC	Solis Core
CJ	Control Joint	HD	Head	SD	Smoke Detector
CL	Center Line	HI	High	SF	Square Foot
CLG	Ceiling	HM	Hollow Metal	SHT	Sheet
CLR	Clear	HP	High Point	SIM	Similar
CMU	Concrete Masonry Unit	HR	Hour	SOG	Slab on Grade
COL	Column	HVAC	Heating, Ventilating, Air Conditioning	SPEC	Specified OR Specification
COMPR	Compressible	IRGWB	Impact Resistant Gypsum Wall Board	SPK	Sprinkler or Speaker
CONC	Concrete	ILO	In Lieu Of	SSTL	Stainless Steel
CONT	Continuous	IN	Inches	STC	Sound Transmission Coefficient
CPT	Carpet	INSUL	Insulated or Insulation	STD	Standard
CT	Ceramic Tile	INT	Interior	STL	Steel
CTYD	Courtyard	LAM	Laminated	STOR	Storage
DBL	Double	LAV	Lavatory	STRUCT	Structure or Structural
DEMO	Demolish or Demolition	LO	Low	T&G	Tongue And Groove
DIA	Diameter	LT	Light	TELE	Telephone
DIM	Dimension	LVR	Louver	TEMP	Tempered or Temperature
DIMS	Dimensions	MAX	Maximum	TLT	Toilet
DN	Down	MCJ	Masonry Control Joint	TME	To Match Existing
DR	Door	MO	Masonry Opening	TO	Top Of
DWG	Drawing	MECH	Mechanical	TOC	Top Of Concrete
EA	Each	MEMBR	Membrane	TOS	Top Of Steel
EIFS	Exterior Insulation Finish System	MIN	Minimum	TPD	Toilet Paper Dispenser
EJ	Expansion Joint	MIR	Mirror	T/D	Telephone/Data
EL	Elevation	MISC	Miscellaneous	TV	Television
ELEC	Electrical	MRGWB	Moisture-Resistant Gypsum Board	TYP	Typical
ELEV	Elevator or Elevation	MTL	Metal	UNO	Unless Noted Otherwise
EMER	Emergency	NIC	Not In Contract	U/S	Underside
EPDM	Ethylene Propylene Diene m(Roofing)	NO	Number	VCT	Vinyl Composition Tile
EQ	Equal	NOM	Nominal	VIF	Verify In Field
EXIST	Existing	NTS	Not to Scale	VP	Vision Panel
EXP JT	Expansion Joint	OC	On Center	VWC	Vinyl Wall Covering
EXT	Exterior	OD	Overflow Drain	W/	With
FBO	Furnished by Others	OFCI	Owner Furnished Contractor Installed	W/O	Without
FD	Floor Drain or Fire Department	OH	Overhang or Opposite Hand	WC	Water Closet
FEC	Fire Extinguisher Cabinet	OPP	Opposite or Opposite Hand	WD	Wood
FF	Finished Face or Finished Floor	OZ	Ounce	WIN	Window
FFL	Finished Floor Level	PCC	Pre-Cast Concrete	WP	Waterproof/Waterproofing
FIXT	Fixture	PL	Property Line		
FLR	Floor	PLAM	Plastic Laminated		

PROJECT INFORMATION

OWNER - CITY OF COLORADO SPRINGS
PARKS AND RECREATION
ERIK RODRIGUEZ
719-385-6512

ARCHITECT
JUST ARCHITECTURE & DESIGN, LTD.
9815 WESTBURY CT
HIGHLANDS RANCH, CO 80129
KYLE@JUSTARCHITECTUREANDDESIGN.COM
720-323-1493

MECH/ PLUMB/ ELEC ENGINEER
RAMIREZ, JOHNSON, & ASSOCIATES
3301 LAWRENCE ST, SUITE 2
DENVER, CO, 80205
TEL-720-598-0774

GENERAL CONTRACTOR
TBD

PIKE PEAK REGIONAL BUILDING DEPARTMENT
2880 INTERNATIONAL CIRCLE,
COLORADO SPRINGS, CO 80910
719-327-2880

STRUCTURAL AND CIVIL ENGINEER
ASHLEY & VANCE
9555 RALSTON RD, UNIT 201
ARVADA, CO, 80002
TEL-303-755-9762

APPLICABLE CODES
2017 PIKES PEAK REGIONAL BUILDING CODE

OCCUPANCY CLASSIFICATION
GROUP U

CONSTRUCTION TYPE
V-B NON-SPRINKLERED

ALLOWABLE STORIES 1
PROPOSED STORIES 1

ALLOWABLE HEIGHT 40'-0"
PROPOSED HEIGHT 13'-2"

ALLOWABLE SQUARE FOOTAGE 5,500 SF
PROPOSED SQUARE FOOTAGE 264 SF

SYMBOL LEGEND

1	KEYNOTE
002	DOOR TAG
4050	WINDOW TAG
1 / A201	DETAIL
W-1	WALL TYPE TAG
1 / A201	EXTERIOR ELEVATION TAG
0"-0" AFF	ELEVATION TAG
A-A / A301	BUILDING SECTION
A-A / A301	WALL SECTION
1	REVISION TAG
ROOM NAME 001	ROOM TAG
1 / A401 (1, 2, 3, 4)	INTERIOR ELEVATION CALL OUT
EXIT	TACTILE EXIT SIGN WALL MOUNTED
N	NORTH ARROW
	WALL OR CLG MOUNTED ILLUMINATED EXIT SIGN

SHEET INDEX

G100 TITLE SHEET

CIVIL

C-0.1 CIVIL TITLE SHEET
C-0.2 CIVIL NOTES
C-2.1 SITE IMPROVEMENT PLAN
C-3.1 SITE UTILITY PLAN
C-4.1 CIVIL DETAILS
C-5.1 EROSION CONTROL PLAN

ARCHITECTURAL

A001 ARCHITECTURAL SITE PLAN
A101 FLOOR, ROOF, AND SLAB PLANS
A201 ELEVATIONS, BUILDING SECTION, AND DOOR AND HARDWARE SCHEDULE
A501 DETAILS

STRUCTURAL

S-1.1 STRUCTURAL TITLE SHEET
S-1.2 STRUCTURAL SPECIFICATIONS
S-2.1 FOUNDATIONS PLAN AND ROOF FRAMING PLAN
S-3.1 DETAILS

MECHANICAL/ PLUMBING

MP001 COVER SHEET
MP002 SPECIFICATIONS
MP003 COMCHECK
MP004 SCHEDULES AND DETAILS
MP101 MECHANICAL AND PLUMBING PLANS

ELECTRICAL

E001 ELECTRICAL LEGEND
E002 SPECIFICATIONS
E003 COMCHECK
E004 ONE-LINE DIAGRAM & SCHEDULES
E101 LIGHTING AND POWER PLAN

Released for Permit
10/05/2023 11:05:18 AM
Pikes Peak REGIONAL Building Department
Bauer, A
ENUMERATION

Released for Permit
10/06/2023 9:02:10 AM
Pikes Peak REGIONAL Building Department
Christinch
CONSTRUCTION

PROJECT DESCRIPTION

THE SCOPE OF THIS PROJECT IS TO BUILD A GROUND-UP EQUIPMENT BUILDING FOR AN AERATION SYSTEM FOR PROSPECT LAKE. THE BUILDING WILL HOUSE COMPRESSORS AND PUMPS. THE BUILDING WILL ONLY BE OCCUPIED DURING ROUTINE MAINTENANCE OF THE SYSTEM.

DEFERRED SUBMITTALS

THE FOLLOWING SYSTEMS ARE A DESIGN BUILD RESPONSIBILITY OF THE GENERAL CONTRACTOR AND WILL REQUIRE THE DEFERRED SUBMITTAL OF DESIGN WORK TO THE CITY AND OR FIRE DEPARTMENT FOR PLAN REVIEW AND PERMITTING.

1. N/A

VICINITY MAP

STATE OF COLORADO
KYLE JUSTIN MATTHEWS
401110
09/15/23
LICENSED ARCHITECT
STAMP

PROSPECT LAKE EQUIPMENT BUILDING
1313 E COSTILLA ST, COLORADO SPRINGS, CO

#	DATE	ISSUE
1	2/20/23	1ST PERMIT
2	9/15/23	2ND PERMIT
3		
4		
5		
6		

PROJECT NUMBER: 23-001
DRAWN BY: KJM
CHECKED BY: KJM

ALL INSTRUMENTS OF SERVICE, ALL DESIGNS, IDEAS AND INFORMATION SHOWN ON THESE DRAWINGS ARE AND SHALL REMAIN THE PROPERTY OF JUST ARCHITECTURE & DESIGN, LTD. NO PART THEREOF SHALL BE COPIED, DISCLOSED TO OTHERS, OR USED IN CONNECTION WITH ANY PROJECT OTHER THAN THE SPECIFIC PROJECT FOR WHICH THEY HAVE BEEN PREPARED WITHOUT THE WRITTEN CONSENT OF JUST ARCHITECTURE & DESIGN, LTD. VISUAL CONTACT WITH THESE DRAWINGS SHALL CONSTITUTE CONCLUSIVE EVIDENCE OF ACCEPTANCE OF THESE RESTRICTIONS.

COVER SHEET

G100

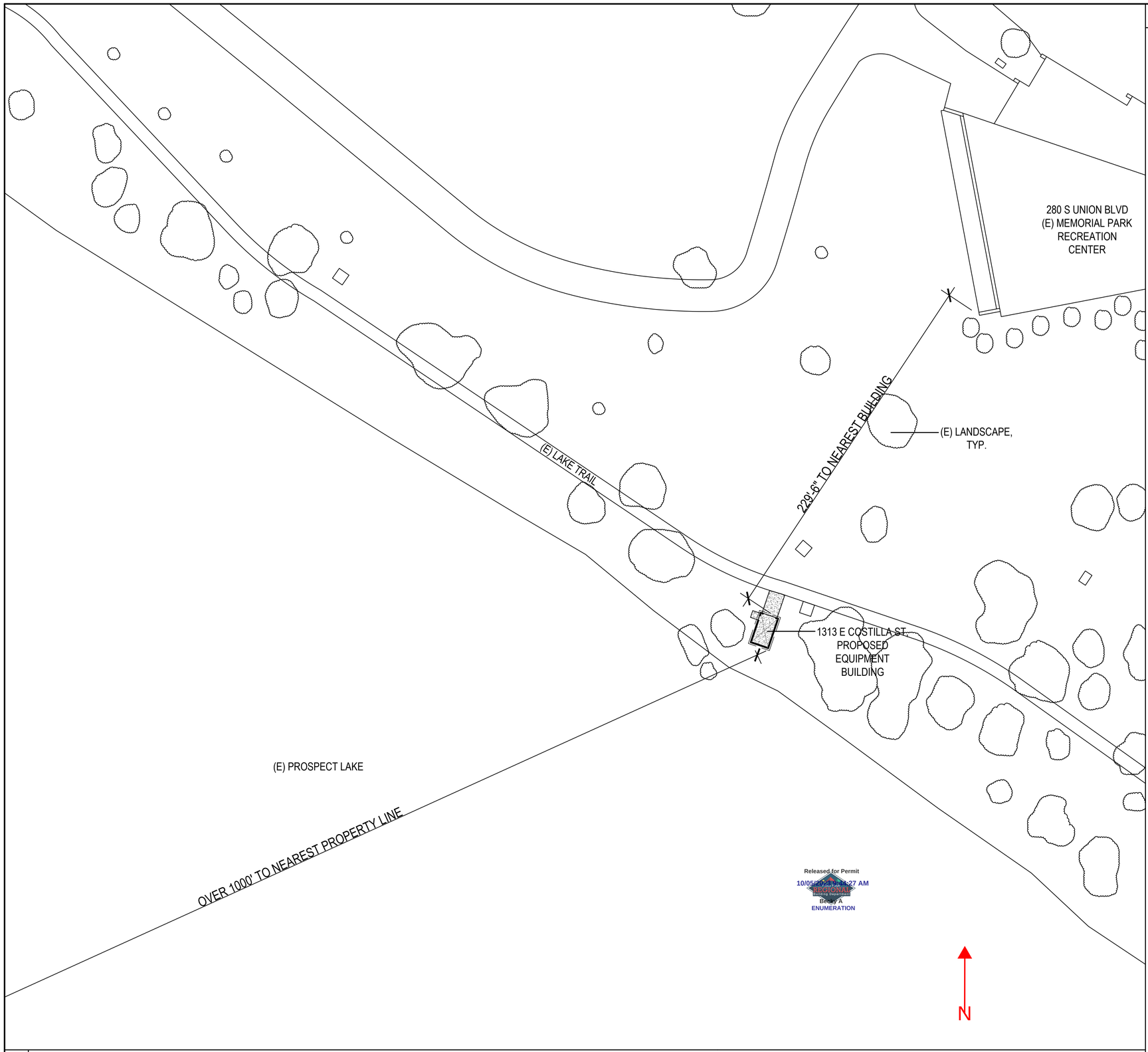

1 ARCHITECTURAL SITE PLAN

SCALE: 1" = 30'-0"

Released for Permit
10/05/2023 9:44:27 AM
REGIONAL
Building Department
Beary A
ENUMERATION

Released for Permit
10/06/2023 9:02:13 AM
REGIONAL
Building Department
Chrisgineh
CONSTRUCTION

SITE PLAN GENERAL NOTES

1. THIS ARCHITECTURAL SITE PLAN IS PROVIDED TO SHOW SITE DISTRIBUTION, CONSTRUCTION/ BUILDING NUMBERING, AND MINIMUM SETBACKS TO ADJACENT BUILDINGS OR PROPERTY LINES PER CODE.
2. REFER TO CIVIL ENGINEERING PLANS FOR ALL FINAL GRADING AND SLOPE INFORMATION AS WELL AS SPECIFIC UTILITY, STRUCTURE, AND STREET INFORMATION.
3. REFER TO CIVIL AND STRUCTURAL DRAWINGS FOR ALL SITE WALL LOCATION AND CONSTRUCTION INFORMATION
4. REFER TO LANDSCAPE DRAWINGS FOR LANDSCAPE AND IRRIGATION INFORMATION.

JUST ARCHITECTURE & DESIGN
PHONE: (720) 323-1493
email: kyle@justarchitectureanddesign.com
9815 Westbury Ct. Highlands Ranch, CO 80129

STATE OF COLORADO
KYLE ALLEN MATTHEWS
401110
09/15/23
LICENSED ARCHITECT

STAMP

PROSPECT LAKE EQUIPMENT BUILDING

1313 E COSTILLA ST, COLORADO SPRINGS, CO

#	DATE	ISSUE
1	2/20/23	1ST PERMIT
2	9/15/23	2ND PERMIT
3		
4		
5		
6		

PROJECT NUMBER: 23-001
DRAWN BY: KJM
CHECKED BY: KJM

ALL INSTRUMENTS OF SERVICE, ALL DESIGNS, IDEAS AND INFORMATION SHOWN ON THESE DRAWINGS ARE AND SHALL REMAIN THE PROPERTY OF JUST ARCHITECTURE & DESIGN, LTD. NO PART THEREOF SHALL BE COPIED, DISCLOSED TO OTHERS, OR USED IN CONNECTION WITH ANY PROJECT OTHER THAN THE SPECIFIC PROJECT FOR WHICH THEY HAVE BEEN PREPARED WITHOUT THE WRITTEN CONSENT OF JUST ARCHITECTURE & DESIGN, LTD. VISUAL CONTACT WITH THESE DRAWINGS SHALL CONSTITUTE CONCLUSIVE EVIDENCE OF ACCEPTANCE OF THESE RESTRICTIONS

ARCH SITE PLAN

A001 2

FLOOR PLAN GENERAL NOTES

1. IN THE EVENT OF AN OMITTED NECESSARY DIMENSION. CONTRACTOR TO NOTIFY ARCHITECT
2. CONTRACTOR SHALL NOT SCALE THESE DRAWINGS FOR CONSTRUCTION PURPOSES
3. CONTRACTOR SHALL VERIFY ALL SITE CONDITIONS PRIOR TO STARTING CONSTRUCTION
4. DIMENSIONS TO WOOD AND METAL STUD WALLS ARE SHOWN TO FACE OF STUD U.N.O.
5. CONCRETE FLOOR SLAB TO HAVE CONTROL JOINTS PER STRUCTURAL PLANS
6. PRIOR TO COMPLETION OF CONSTRUCTION CLEAN ALL SURFACES INCLUDING BUT NOT LIMITED TO WINDOWS, STOREFRONTS, SWITCH AND OUTLET PLATES, MILLWORK, HVAC GRILLES, CEILING GRIDS AND TILES, PLUMBING FIXTURES, WALL AND FLOOR FINISHES, AND EXTERIOR FINISHES. RESTORE ANY OF THE ABOVE TO LIKE-NEW GOOD WORKING CONDITION AS REQUIRED.
7. INSTALL FIRE RATED WOOD BLOCKING AT ALL WALL MOUNTED EQUIPMENT LOCATIONS.
8. CONTRACTOR TO VERIFY ALL MECHANICAL EQUIPMENT ROUTES AND SIZES AND VERIFY ROUTES WORK PRIOR TO COMMENCING WORK.
9. ALL EXTERIOR LANDINGS AND WALKS TO BE 1/2" MAX BELOW FINISH FLOOR AND SLOPE AWAY FROM BUILDING AT 2%, SEE DETAILS.
10. ALL ADJACENT GRADE TO SLOPE AWAY FROM BUILDING AT 5% FOR A MINIMUM OF 5'-0", SEE CIVIL DRAWINGS.
11. FOR ALL AIR CONDITIONING EQUIPMENT, EXHAUST AND SUPPLY FANS, HVAC AND REFRIGERATION EQUIPMENT CURBS, CONTRACTOR SHALL PROVIDE AND INSTALL SUITABLE BLOCKING IN WALLS AND CEILINGS TO SUPPORT FIXTURES, EQUIPMENT, DUCT WORK, AND CANOPIES.
12. ALL STUDS AND FURRING SHALL BE INSTALLED AT 16" O.C. U.N.O.
13. ALL WALLS WITH PLUMBING TO BE PROVIDED WITH ACOUSTIC BATT INSULATION TO FILL FULL STUD CAVITY.
14. ALL GYP BD INSTALLED TO HAVE J-METAL EDGES, METAL EDGES AT EXPOSED CORNERS, ENDS, TOP & BOTTOM OF WALLS AND PENETRATIONS OF M.E.P. PROVIDE ESCUCHEONS AT ROUND PENETRATIONS
15. ALL DOOR TRIMMER STUDS TO BE PLACED 6" FROM CORNERS U.N.O
16. INTERIOR WALLS AND CEILING TO BE FINISHED TO A LEVEL 4 DRYWALL FINISH AND PAINTED SHERWIN WILLIAMS WESTHIGHLAND WHITE, GLASS FINISH

FLOOR PLAN LEGEND

6" MEAL STUD WALL, SEE A501 FOR DETAILS

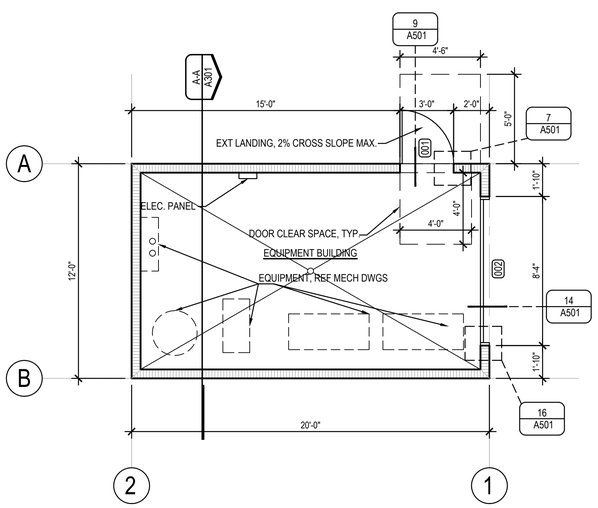

1 FLOOR PLAN SCALE: 1/4" = 1'-0"

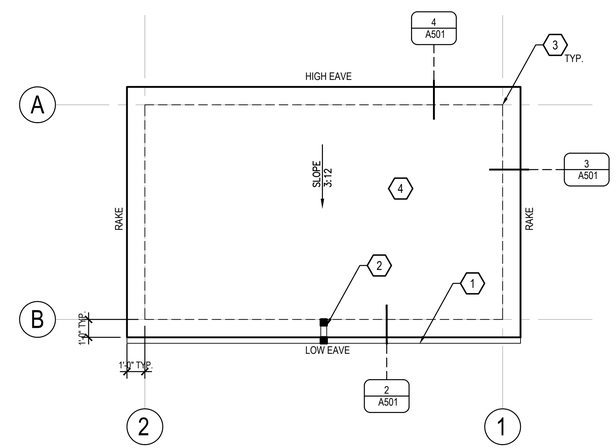

3 ROOF PLAN SCALE: 1/4" = 1'-0"

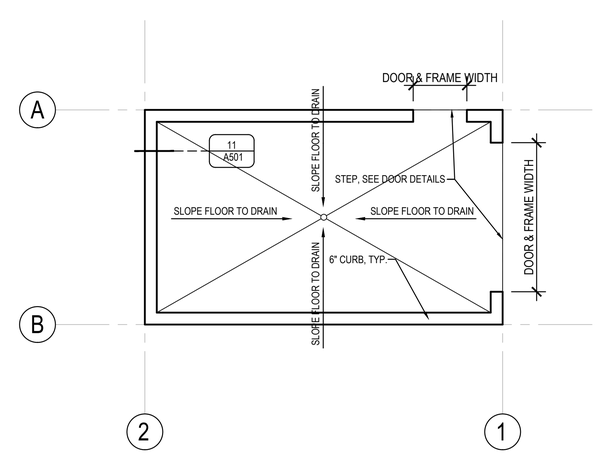

2 SLAB PLAN SCALE: 1/4" = 1'-0"

ROOF PLAN GENERAL NOTES

1. REFER TO ROOF ASSEMBLY FOR ROOF MATERIAL, MANUFACTURER, AND COLORS.
2. CONTRACTOR SHALL PAINT ALL EXPOSED ROOFTOP VENTS TO MATCH ROOM COLOR.
3. ALL SHEET METAL EXPANSION JOINTS SHALL BE "DRIVE-CLEAT" LOCKS. ALL SEAMS AND JOINTS SHALL BE SEALED (COLOR TO MATCH COPING) ALL SHEET METAL COPING OR FLASHING SHALL MEET MINIMUM REQUIREMENTS FOR SMACNA (SHEET METAL AND AIR CONDITIONING CONTRACTORS NATIONAL ASSOCIATION)
4. ROOFING MATERIALS TO BE INSTALLED IN STRICT ACCORDANCE WITH ROOF MANUFACTURERS REQUIREMENTS AND SPECIFICATIONS.
5. FLASHING AND ROOFING DETAILS: BECAUSE ROOFING MANUFACTURERS AND ROOF EQUIPMENT MANUFACTURERS HAVE DIFFERENT DETAILS FOR INSTALLATION OF THEIR ROOF SYSTEMS AND FLASHING CONDITIONS. THE DETAILS WITHIN THIS SET ARE CONSIDERED TO BE DESIGN INTENT. ITEMS SUCH AS PARAPET FLASHING, ROOF VENTS, CANTS, BLOCKING, EXPANSION JOINTS, AND ROOF PENETRATIONS ARE TO BE INSTALLED PER THE MANUFACTURERS DETAILS AND SPECIFICATIONS.
6. REFER TO STRUCTURAL DRAWINGS FOR ADDITIONAL INFO.
7. REFER TO MECHANICAL, ELECTRICAL, AND PLUMBING DRAWINGS FOR ADDITIONAL ROOFTOP EQUIPMENT AND/OR PENETRATIONS.
8. CLEAN ROOF OF ALL CONSTRUCTION DEBRIS THROUGHOUT CONSTRUCTION AND AT COMPLETION.

ROOF PLAN KEY NOTES

1. 4" WIDE BY 4" DEEP GUTTER, TYP. SLOPE 1" : 20'-0"
2. 4" x 4" DOWNSPOUT TYP, PROVIDE SPLASH BLOCK AND RIP RAP BASIN 24" WIDE BY 36" IN DIRECTION OF WATER FLOW.
3. LINE OF WALL BELOW, TYP.
4. STANDING SEAM ROOF SYSTEM

SLAB PLAN GENERAL NOTES

1. REFER TO STRUCTURAL PLANS FOR CONCRETE PLACEMENT INFORMATION.
2. THIS DRAWING IS PROVIDED ONLY TO DISPLAY GENERAL DIMENSIONS, SLOPES, AND STEPS.
3. STRUCTURAL PLANS GOVERN FOR ALL STEM WALL WIDTH, FOOTING DEPTH AND CONCRETE MIX.

Released for Permit
10/06/2023 9:02:17 AM
Pikes Peak REGIONAL Building Department
Christineh
CONSTRUCTION

JUST ARCHITECTURE & DESIGN
PHONE: (720) 323-1493
email: kyle@justarchitectureanddesign.com
9815 Westbury Ct. Highlands Ranch, CO 80129

STATE OF COLORADO
KYLE ALLEN MATTHEWS
401110
09/15/23
LICENSED ARCHITECT
STAMP

PROSPECT LAKE EQUIPMENT BUILDING

1313 E COSTILLA ST, COLORADO SPRINGS, CO

#	DATE	ISSUE
1	2/20/23	1ST PERMIT
2	9/15/23	2ND PERMIT
3		
4		
5		
6		

PROJECT NUMBER: 23-001
DRAWN BY: KJM
CHECKED BY: KJM

ALL INSTRUMENTS OF SERVICE, ALL DESIGNS, IDEAS AND INFORMATION SHOWN ON THESE DRAWINGS ARE AND SHALL REMAIN THE PROPERTY OF JUST ARCHITECTURE & DESIGN, LTD. NO PART THEREOF SHALL BE COPIED, DISCLOSED TO OTHERS, OR USED IN CONNECTION WITH ANY PROJECT OTHER THAN THE SPECIFIC PROJECT FOR WHICH THEY HAVE BEEN PREPARED WITHOUT THE WRITTEN CONSENT OF JUST ARCHOITECTURE & DESIGN, LTD. VISUAL CONTACT WITH THESE DRAWINGS SHALL CONSTITUTE CONCLUSIVE EVIDENCE OF ACCEPTANCE OF THESE RESTRICTIONS

FLOOR PLAN

A101

DOOR AND HARDWARE SCHEDULE

DOORS							FRAME				
MARK	WIDTH	HEIGHT	THICKNESS	MATERIAL	FINISH	TYPE	MATERIAL	FINISH	TYPE	HARDWARE SET	REMARKS
001	3'-0"	7'-0"	1 5/8"	INSULATED CORE MTL DOOR	PAINT	SEE ELEVATIONS	METAL	PAINT	FIELD BUILT	KEYED LOCK WITH LEVER TYPE HANDLE, BRUSHED ALUMINUM. PROVIDE WEATHER SEALS, ALUMINUM SILL SET IN A BED OF SEALANT. (3) 4" HINGES, BRUSHED ALUMINUM FINISH	MAN DOOR
002	8'-0"	8'-0"	PER MANUF.	INSULATED CORE MTL DOOR R-4.75	PAINT	SEE ELEVATIONS	WOOD	PAINT	PER MANUF	1/2 HP OPENER, PROVIDE OPENER BUTTON ON SIDE OF BUILDING NEAR MAN DOOR, LOCATE WITH OWNER PRIOR TO INSTALLATION.	GARAGE DOOR
003											

ELEVATION GENERAL NOTES

1. ANY SIGNAGE DEPICTED ON ELEVATIONS TO BE PERMITTED BY OWNER U.N.O. COORDINATE ELECTRICAL REQUIREMENTS WITH OWNER.
2. REFER TO CIVIL AND STRUCTURAL DRAWINGS FOR RETAINING WALL AND GRADING INFORMATION .
3. CONNECT ALL ROOF DRAINS AND DOWNSPOUTS TO SWALE DRAINAGE, REFER TO CIVIL PLANS.
4. PROVIDE FIRE TREATED 2X BACKING AT ALL EXTERIOR LIGHTING FIXTURES.
5. CONTRACTOR TO BE RESPONSIBLE FOR ADDRESS SIGNAGE. USE 7" HIGH RAISED LETTER METAL SIGNAGE. VERIFY WITH LOCAL FIRE DEPARTMENT ADDRESSING REQUIREMENTS AND LOCATION PRIOR TO ORDERING SIGNAGE.
6. PROVIDE EXPANSION JOINTS IN STUCCO AT 10'-0" O.C. MAX OR AS SHOWN ON ELEVATIONS. USE 1/2" BRUSHED ALUMINUM REVELS
7. ALL EXTERIOR FINISH COLORS AND MATERIALS MUST BE SUBMITTED TO ARCHITECT AND OWNER FOR APPROVAL PRIOR TO INSTALLATION.
8. ALL EXPOSED METAL TO BE POWDER COATED FINISH TO MATCH ADJACENT SURFACE
9. DRYVIT (CCP) 2 SYSTEM TO BE INSTALLED PER MANUFACTURERS REQUIREMENTS AND RECOMMENDATIONS. SEE DETAILS.
10. DEPENDING ON THE REQUIRED THICKNESS OF ROOF INSULATION REQUIRED TO ACHIEVE THE REQUIRED R VALUE, FASCIA BOARDS MAY NEED TO BE INCREASED IN SIZE TO PROVIDE PROPER ROOF END COVERAGE. COORDINATE WITH EXACT INSULATION PROVIDED.

ELEVATION KEY NOTES

EXTERIOR FINISHES/ MATERIALS

	MATERIAL	MARK
GUTTERS AND DOWNSPOUT	PAINT TO MATCH TRIM COLOR	1
DOOR TRIM	PAINT TO MATCH TRIM COLOR	2
FASCIA BOARD	2X8 CEDAR, PAINTED TO MATCH TRIM	3
SOFFIT BOARD	MBCI BATTENLOK HS COMPATABLE METAL PANEL	4
EXTERIOR STUCCO SYSTEM	DRYVIT COMMERCIAL CEMENT PLASTER 2 SYSTEM, SW 7641 COLONADE GRAY MAIN COLOR, SW 7018 DOVETAIL TRIM COLOR	5
ROOFING	MBCI BATTENLOK HS 16" WIDTH STANDING SEAM ROOD SYSTEM, COLOR CLASSIC GREEN	6

NOTE: ALL PAINT AND STAIN COLORS TO BE APPROVED BY OWNER/ ARCHITECT

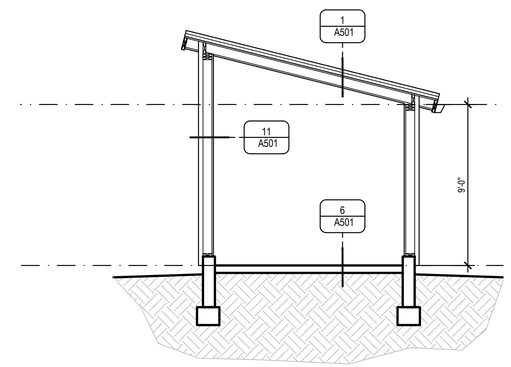

1 SECTION A-A

SCALE: 1/4" = 1'-0"

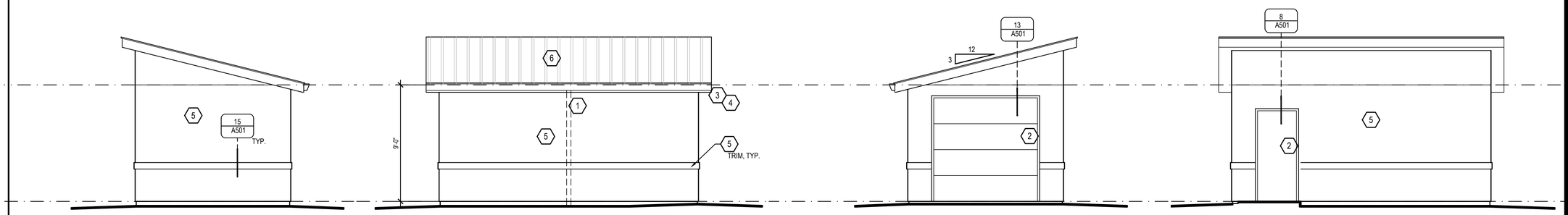

SOUTH

EAST

NORTH

WEST

Released for Permit
10/06/2023 9:02:20 AM
Pikes Peak REGIONAL Building Department
Christineh
CONSTRUCTION

SCALE: 1/4" = 1'-0"

JUST ARCHITECTURE & DESIGN

PHONE: (720) 323-1493
email: kyle@justarchitectureanddesign.com
9815 Westbury Ct. Highlands Ranch, CO 80129

STATE OF COLORADO
KYLE ALLEN MATTHEWS
401110
09/15/23
LICENSED ARCHITECT

STAMP

PROSPECT LAKE EQUIPMENT BUILDING

1313 E COSTILLA ST, COLORADO SPRINGS, CO

#	DATE	ISSUE
1	2/20/23	1ST PERMIT
2	9/15/23	2ND PERMIT
3		
4		
5		
6		

PROJECT NUMBER: 23-001
DRAWN BY: KJM
CHECKED BY: KJM

ALL INSTRUMENTS OF SERVICE, ALL DESIGNS, IDEAS AND INFORMATION SHOWN ON THESE DRAWINGS ARE AND SHALL REMAIN THE PROPERTY OF JUST ARCHITECTURE & DESIGN, LTD. NO PART THEREOF SHALL BE COPIED, DISCLOSED TO OTHERS, OR USED IN CONNECTION WITH ANY PROJECT OTHER THAN THE SPECIFIC PROJECT FOR WHICH THEY HAVE BEEN PREPARED WITHOUT THE WRITTEN CONSENT OF JUST ARCHITECTURE & DESIGN, LTD. VISUAL CONTACT WITH THESE DRAWINGS SHALL CONSTITUTE CONCLUSIVE EVIDENCE OF ACCEPTANCE OF THESE RESTRICTIONS.

ELEVATIONS

A201

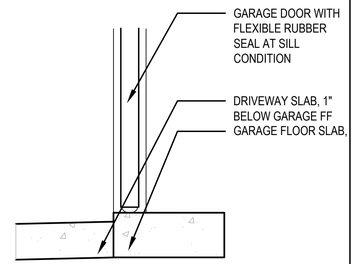

14 GAR DOOR SILL SCALE 1-1/2"=1'-0"

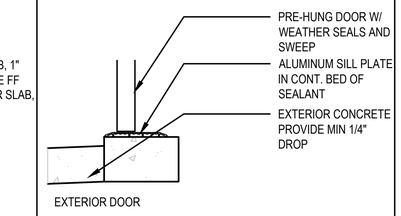

9 DOOR SILL SCALE 1-1/2"=1'-0"

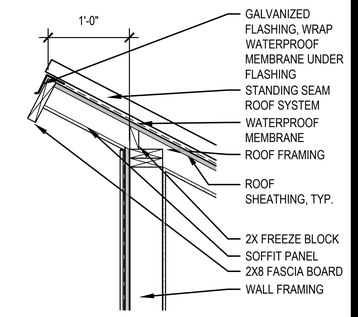

4 HIGH EAVE DETAIL SCALE 1"=1'-0"

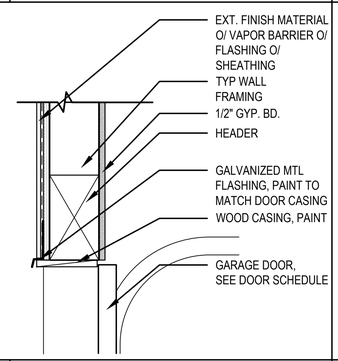

13 DOOR HEAD @ GAR SCALE 1-1/2"=1'-0"

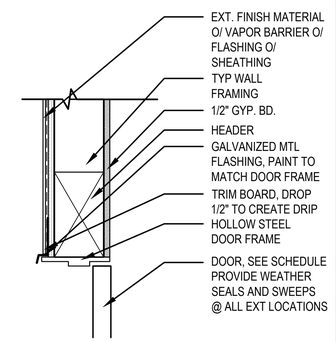

8 EXT DOOR HEAD SCALE 1-1/2"=1'-0"

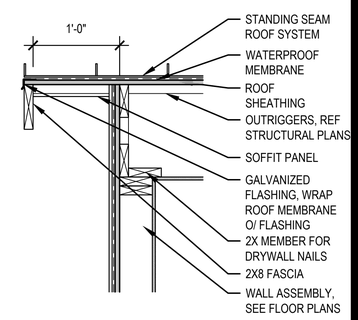

3 RAKE DETAIL SCALE 1"=1'-0"

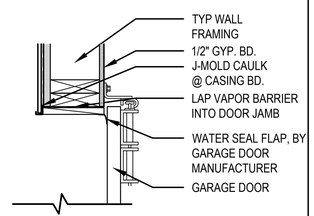

16 GARAGE DOOR JAMB SCALE 1-1/2"=1'-0"

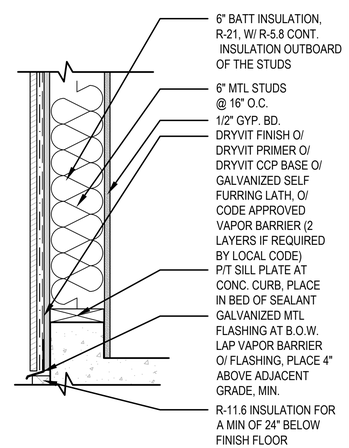

11 TYP. EXT. WALL SCALE 1-1/2"=1'-0"

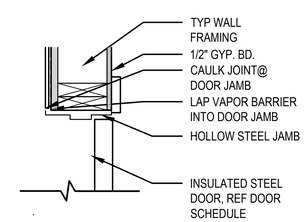

7 EXT DOOR JAMB SCALE 1-1/2"=1'-0"

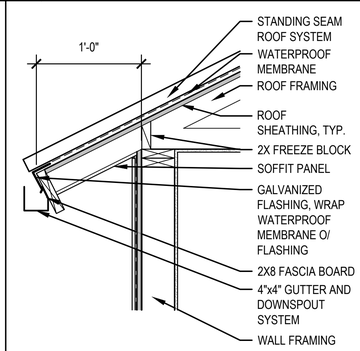

2 EAVE DETAIL SCALE 1"=1'-0"

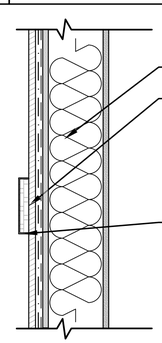

15 WALL BAND SCALE 1-1/2"=1'-0"

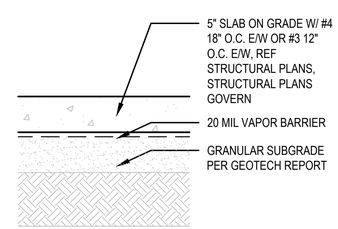

6 TYP. SLAB ON GRADE SCALE 1-1/2"=1'-0"

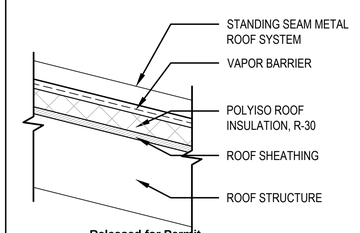

1 ROOF ASSEMBLY SCALE 1-1/2"=1'-0"

Released for Permit
10/06/2023 9:02:23 AM
Pikes Peak REGIONAL Building Department
Christineh
CONSTRUCTION

JUST ARCHITECTURE & DESIGN
PHONE: (720) 323-1493
email: kyle@justarchitectureanddesign.com
9815 Westbury Ct. Highlands Ranch, CO 80129

STATE OF COLORADO
KYLE ALLEN MATTHEWS
401110
09/15/23
LICENSED ARCHITECT
STAMP

PROSPECT LAKE EQUIPMENT BUILDING

1313 E COSTILLA ST, COLORADO SPRINGS, CO

#	DATE	ISSUE
1	2/20/23	1ST PERMIT
2	9/15/23	2ND PERMIT
3		
4		
5		
6		

PROJECT NUMBER: 23-001
DRAWN BY: KJM
CHECKED BY: KJM

ALL INSTRUMENTS OF SERVICE, ALL DESIGNS, IDEAS AND INFORMATION SHOWN ON THESE DRAWINGS ARE AND SHALL REMAIN THE PROPERTY OF JUST ARCHITECTURE & DESIGN, LTD. NO PART THEREOF SHALL BE COPIED, DISCLOSED TO OTHERS, OR USED IN CONNECTION WITH ANY PROJECT OTHER THAN THE SPECIFIC PROJECT FOR WHICH THEY HAVE BEEN PREPARED WITHOUT THE WRITTEN CONSENT OF JUST ARCHITECTURE & DESIGN, LTD. VISUAL CONTACT WITH THESE DRAWINGS SHALL CONSTITUTE CONCLUSIVE EVIDENCE OF ACCEPTANCE OF THESE RESTRICTIONS

DETAILS

A501

Prospect Lake Pumphouse

~~Prospect Lake Drive,~~ 1313 E COSTILLA ST
Colorado Springs, CO 80910

STANDARD DETAILS

3 TYPICAL CONCRETE SLAB JOINTS

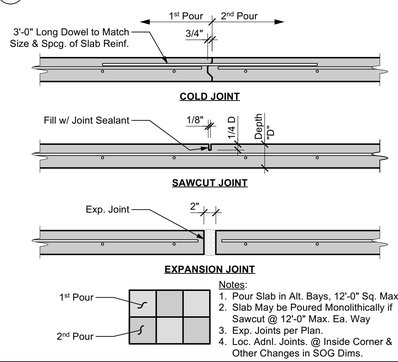

Notes:
1. Pour Slab in Alt. Bays, 12'-0" Sq. Max.
2. Slab May be Poured Monolithically if Sawcut @ 12'-0" Max. Ea. Way
3. Exp. Joints per Plan.
4. Loc. Adnl. Joints. @ Inside Corner & Other Changes in SOG Dims.

1 TYPICAL REINFORCING BAR BENDS

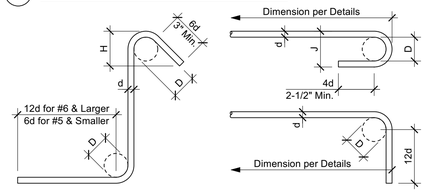

STANDARD TIES & STIRRUPS

Bar Size	D	H (Approx.)
#3	1-1/2"	3"
#4	2"	3"
#5	2-1/2"	3-3/4"
#6	4-1/2"	4-1/2"
#7	5-1/4"	5-1/4"
#8	6"	6"

STANDARD END HOOKS

Bar Size	D	J
#3	2-1/4"	3"
#4	3"	4"
#5	3-3/4"	5"
#6	4-1/2"	6"
#7	5-1/4"	7"
#8	6"	8"

Note:
All Bar Bend Diameters & End Lengths Must Conform to the CRSI Manual of Standard Practice

4 TYP. PENETRATION THROUGH FOUNDATION

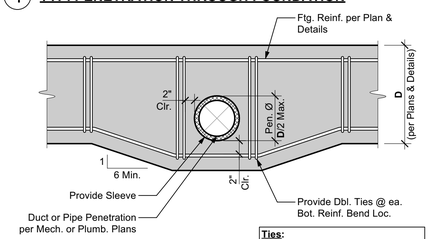

DO NOT Locate Pen. w/n 24" of Any Holdowns

Ties:
Ftg. Reinf. = (1) Bar T&B, Use #3 Vert. w/ 180° Hook ea. End
Ftg. Reinf. > (1) Bar T&B, Use #3 Stirrup w/ 135° Hooks @ Top

2 STD. DEVELOPMENT LENGTHS & LAP SPLICES

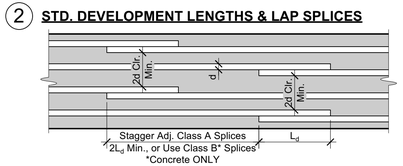

Bar Size	CONCRETE F'c = 2500 psi Length of Lap Ld & Class A	Class B	Hook Embed Ldh
#3	15 "	19 "	7"
#4	19 "	25 "	10"
#5	24 "	31 "	14"
#6	29 "	37 "	18"
#7	41 "	54 "	22"
#8	47 "	61 "	27"

Released for Permit
10/06/2023 9:02:34 AM
Christinch
CONSTRUCTION

ABBREVIATIONS

AB	Anchor Bolt	Mas.	Masonry
A&B	Above and Below	Max.	Maximum
Abv.	Above	MB	Machine Bolt
Adn.	Addition (al)	MF	Moment Frame
Adj.	Adjacent,Adjustable	Mfr.	Manufacture(r)
Alt.	Alternate (ive)	Min.	Minimum, Minute
Appd.	Approved	Mod.	Modif(y), (ication)
Arch.	Architect(ural)	Mtl.	Metal
Avg.	Average	(N)	New
Bdry.	Boundary	N/A	Not Applicable
Bldg.	Building	Nat.	Natural
Blk(g).	Block (ing)	NTS	Not to Scale
Bm.	Beam	o/	Over
BN	Boundary Nailing	oc	On Center
B-O	Bottom of	OD	Outside Diameter
BO	By Others	Opng.	Opening
Bot.	Bottom	Opp.	Opposite
Brg.	Bearing	Opt.	Optional
Btwn.	Between	Para.	Parallel
BW	Both Ways	PCF	Lbs per Cubic Ft.
Cant.	Cantilever(ed)	Pen.	Penetrate, (tion)
CIP	Cast in Place	Perf.	Perforated
CJ	Ceiling Joist	Perim.	Perimeter
CJP	Complete Joint Penetration	Perp.	Perpendicular
		Pl	Panel Index
CL	Center Line	PJP	Partial Joint Pen.
Clg.	Ceiling	PL	Plate
CMU	Conc. Masonry Unit	PLF	Lbs per Linear Ft.
Col.	Column	Ply.	Plywood
Com.	Common	Prep.	Prepare, (ation)
Comp.	Component	Press.	Pressure
Conc.	Concrete	Proj.	Project
Conn.	Connection	Prop.	Property
Const.	Construction	PSF	Lbs per Square Ft.
Cont.	Continue (ous)	PSI	Lbs per Square In.
Ctr.	Center	PT	Pressure-Treated
d	Penny	PV	Photovoltaic (Solar Panels)
Dbl.	Double		
Defl.	Deflection	R	Radius
Deg.	Degree	Rec(s).	Recommendation(s)
Demo.	Demolish(tion)	Rect.	Rectangular
Dep.	Depress(ed)	Ref.	Reference
DF	Douglas Fir	Reinf.	Reinforce(d), (ment),(ing)
Dia.	Diameter		
Diaph.	Diaphragm	Req(d).	Require(d)
Dif.	Different	Reqs.	Requirements
Dim.	Dimension	Ret.	Retain(ing)
Dist.	Distance	RJ	Roof Joist
DJ	Deck Joist	RR	Roof Rafter
DL	Dead Load	RW	Redwood
DP	Deep	SAD	See Arch Dwg's
Dwg.	Drawing	Sched.	Schedule
(E)	Existing	Sgl.	Single
Ea.	Each	Shtg.	Sheathing
EF	Each Face	Sim.	Similar
EFP	Equivalent Fluid Pressure	SIP	Str. Insulated Panel
		SM	Sheet Metal
Elev.	Elevator, Elevation	SMS	Sheet Metal Screw
Embed.	Embed(ed), (ment)	SOG	Slab on Grade
Engr.	Engineer	Spec.	Specifi(ed),(cations)
EOR	Engineer of Record	Sq.	Square
Eq.	Equal, Equivalent	SS	Structural Steel
ES	Each Side	Std.	Standard
EW	Each Way	Stgr.	Stagger(ed)
Exp.	Expand, Expansion	Stl.	Steel
Ext.	Exterior	Struc.	Structure, (al)
Fdn.	Foundation	SW	Shear Wall
FF	Finished Floor	Sym.	Symmet(ry), (rical)
FJ	Floor Joist	T&B	Top and Bottom
Flr(g).	Floor (ing)	T&G	Tongue and Groove
FOC	Face of Concrete	Temp.	Temporary
FOM	Face of Masonry	Thk.	Thick(ness)
FOS	Face of Studs	Thru	Through
FOW	Face of Wall	TN	Toe-Nail
Frmg.	Framing	TP	Top Plate
Ft.	Foot, Feet	T-O	Top of
Ftg.	Footing	TOB	Top of Beam
Ga.	Gage, Gauge	TOC	Top of Concrete
Galv.	Galvanized	TOG	Top of Grade
GB	Grade Beam	TOM	Top of Masonry
GC	General Contractor	TOS	Top of Steel
Gyp.	Gypsum	TOW	Top of Wall
HD	Holdown	TRU	To Remain Unchanged
Hdr.	Header		
Hdw.	Hardware	Trmr.	Trimmer Stud
Hgr.	Hanger	Typ.	Typical
Hor(iz).	Horizontal	UNO	Unless Noted Otherwise
Ht.	Height		
ID	Inside Diameter	Vert.	Vertical
In.	Inch(es)	VIF	Verify in Field
Insp.	Inspect(ion)	VWA	Verify with Arch
Int.	Interior	W	Wide
Inv.	Invert, Inverted	w/	With
Jst.	Joist	w/n	Within
K	Kips (1,000 pounds)	w/o	Without
KLF	Kips per Linear Ft.	WS	Wood Screw
King	King Stud	Wndw.	Window
KP	King Post	Wt.	Weight
KSF	Kips per Square Ft.	WWF	Welded Wire Fabric
KSI	Kips per Square In.	Yd.	Yard
Lb(s).	Pound(s)		
LL	Live Load	@	At
Loc.	Location	°	Degrees
LW	Light Weight	Ø	Diameter
		>	Greater Than
		<	Less Than
		#	Number, Pound(s)
		/	Per
		%	Percent(age)
		±	Plus or Minus

PROJECT INFORMATION

CLIENT:
Michael Segala
5765 Olde Wadsworth Blvd. Suite 10,
Arvada, CO 80002

ARCHITECT:
Just Architecture and Design
9815 Westbury Ct.
Highlands Ranch, CO 80129
(720) 323-1493

SOILS/GEO. ENGINEER:
Terracon Consultants, Inc.
4172 Center Park Drive
Colorado Springs, Colorado 80916
(719) 597-2116

DESIGN PARAMETERS

GENERAL PARAMETERS
Building Code 2015 IBC *
Roof Loads
Dead Loads** (DL) 15 psf
**Includes 3 psf PV Loads
Snow Loads (SL) 37.8 psf

SOILS VALUES (Per Soils Report)
Bearing Pressure 2000 psf

WIND DESIGN BASIS
Ultimate Wind Speed, V_{ULT} 130 mph
Nominal Wind Speed, V_{ASD} 101 mph
Risk Category II
Exposure C
Importance Factor, I_w 1.00

SEISMIC DESIGN BASIS
Seismic Design Category B
Site Class C
Seismic Factors
S_S / S_1 0.203 / 0.058
S_{DS} / S_{D1} 0.217 / 0.093
Risk Category II
Importance Factor, I_e 1.00
Resisting System: Plywood over CFS Stud Shear Walls
Response Mod. Coefficient, R 6.5
Design Base Shear V = 0.033W
Analysis Procedure: Eqv. Lateral Force (ASCE 7-16, T. 12.6-1)

SHEET INDEX

S-1.1 Structural Title Sheet
S-1.2 Structural Specifications
S-2.1 Foundation Plan & Roof Framing Plan
S-3.1 Structural Details

Ashley&Vance ENGINEERING, INC.
9555 Ralston Road, Unit 201
Arvada, CO 80002
(303) 755-9762
www.ashleyvance.com
CIVIL • STRUCTURAL

The use of these plans and specifications shall be restricted to the original site for which they were prepared and publication thereof is expressly limited to such use. Reproduction or publication by any method, in whole or in part, is prohibited. Title to these plans and specifications remain with Ashley & Vance Engineering, Inc. without prejudice. Visual contact with these plans and specifications shall constitute prima facie evidence of the acceptance of these restrictions.

Engineer of Record:
COLORADO LICENSED
CHARLES R. ASHLEY
51504
PROFESSIONAL ENGINEER

Prospect Lake Pumphouse
Prospect Lake Drive,
Colorado Springs, CO 80910

Revision:

1	Plan Check	13 Sept. 2023

Proj. Engr.: MVI Phone Ext.:
Proj. Mngr.: RMF Phone Ext.: 115
Date: 17 Feb. 2023 Scale: NTS
A&V Job No.: 221743

STRUCTURAL TITLE SHEET

S-1.1

DO NOT SCALE THESE DRAWINGS. Refer to Architectural plans for all dimensions.

Sep 13, 2023
7:09:30 PM

GENERAL NOTES

1. The following notes, details, schedules & specifications shall apply to all phases of this project unless specifically noted otherwise. Notes and details on the structural plans shall take precedence over general notes and typical details. Where no details are given, construction shall be as shown for similar work.
2. All drawings are considered to be part of the contract documents. The Contractor shall be responsible for the review and coordination of all drawings and specifications prior to the start of construction. Any discrepancies shall be brought to the attention of the Engineer prior to the start of construction so that a clarification can be issued. Any work performed in conflict with the contract documents or any applicable code requirements shall be corrected by the Contractor at no expense to the Owner or Engineer.
3. All information on existing conditions shown on the structural plans are based on best present knowledge available, but without guarantee of accuracy. The Contractor shall be responsible for the verifications of all dimension and conditions at the site. Any discrepancies between actual site conditions and information shown on the drawings or in the specifications shall be brought to the attention of the EOR prior to the start of construction.
4. Refer to the Architectural plans for the following:
   (a) Dimensions
   (b) Size and location of all interior and exterior wall locations.
   (c) Size and location of all floor, roof and wall openings
   (d) Size and location of all drains, slopes, depressions, steps, etc.
   (e) Specification of all finishes & waterproofing
   (f) All other non-structural elements
5. Refer to the mechanical, electrical and plumbing plans for the following:
   (a) Size and location of all equipment
   (b) Pipe runs, sleeves, hangers and trenches
   (c) All other mechanical, electrical or plumbing related elements
6. **DO NOT** scale structural plans. Contractor shall use all written dimensions on Architectural plans.
7. Construction materials shall be uniformly spread out if placed on floor or roof so as to not overload the framing. Load shall not exceed the design live load per square foot. It is the Contractor's responsibility to provide adequate shoring and/or bracing as required.
8. Specifications and detailing of all waterproofing and drainage items, while sometimes shown on the structural plans for general information purposes only, are solely the design responsibility of others.
9. The Engineer will not be responsible for and will not have control or charge of construction means, methods, techniques, sequences or procedures, or for safety precautions and programs in connection with the construction delineated by these plans. It should be understood that the Contractor or his/her agent(s) shall supervise and direct all work and shall be solely and completely responsible for all construction means, methods, techniques, sequences, procedures and conditions on the job site, including safety of all persons and property during the entire period of construction. Periodic observations by the Engineer, his staff or representatives are not intended to include verification of dimensions or review the adequacy of the Contractor's safety measures on or near the construction site.
10. Modifications of the plans, notes, details and specifications shall not be permitted without prior approval from the Engineer.
11. All workmanship shall conform to the best practice prevailing in the various trades performing the work. The Contractor shall be responsible for coordinating the work of all trades.
12. It is the Contractor's responsibility to ensure that only approved structural plans are used during the course of construction. The use of unapproved documents shall be at the contractor's own risk. Corrections of all work based on such documents shall be performed at the Contractor's expense.
13. These plans and specifications represent the structural design only. No information nor warranty is provided for the work of any other Consultant (Architect, Mechanical, Electrical, etc.). This includes, but is not limited to, waterproofing, drainage, ventilation, accessibility, or dimensions.

FASTENERS

1. Nails:
   (a) shall be with "common" nails unless noted otherwise.
   (b) shall not be driven closer than 1/2 their length nor closer than 1/4 of their length to the edge or end of a member, except for sheathing.
   (c) shall be installed in pre-drilled lead holes if necessary to avoid splitting.
   (d) shall be hot-dipped zinc-coated galvanized steel, stainless steel, silicon bronze, or copper when in contact with preservative-treated wood.
      i. When used in exterior applications, nails shall have coating types and weights in accordance with the treated wood or bolt manufacturer's Recs. A Min. of ASTM A653, type G185 zinc-coated galvanized steel (or equiv.) shall be used.
      ii. When used in an interior, dry environment in SBX/DOT or zinc borate preservative-treated wood, plain carbon nails shall be permitted.
   (e) All nailing shall conform to the Governing Building Code, Table 2304.10.2.
2. Lag screws:
   (a) shall be installed into pre-drilled lead holes. Lubricant (or soap) shall be used to facilitate installation and prevent damage to the screws.
   (b) shall be hot-dipped zinc-coated galvanized steel or stainless steel when in contact with preservative-treated wood.
      i. When used in exterior applications, bolts shall have coating types and weights in accordance with the treated wood or bolt manufacturer's rec's. A minimum of ASTM A653, type G185 zinc-coated galvanized steel (or equal) shall be used.
      ii. When used in dry interior environments in SBX/DOT or zinc borate preservative-treated wood, plain carbon screws, nuts, and washers shall be permitted.
3. Bolts:
   (a) shall conform to ASTM A307, UNO specifically on plans and details.
   (b) shall be installed in pre-drilled holes a max of 1/16" larger than the specified bolt dia.
   (c) when installed against wood surfaces, shall have standard washers under the heads and nuts.
   (d) shall be hot-dipped zinc-coated galvanized steel or stainless steel when in contact with preservative-treated wood.
      i. When used in exterior applications, bolts shall have coating types and weights in accordance with the treated wood or bolt manufacturer's rec's. A minimum of ASTM A653, type G185 zinc-coated galvanized steel (or equal) shall be used.
      ii. When used in dry interior environments in SBX/DOT or zinc borate preservative-treated wood, plain carbon screws, nuts, and washers shall be permitted.
4. Anchor Bolts:
   (a) shall be installed at all exterior walls and all interior shear and/or bearing walls.
   (b) shall be 1/2" diameter with 3x3x0.229" steel plate washers at shearwalls.
   (c) shall be 1/2" diameter with 2x2x3/16" steel plate washers at non-shearwalls.
   (d) shall have 7" minimum embedment. (Contractor to coordinate length of bolts with sill plate thicknesses).
   (e) shall conform to ASTM A307.
   (f) shall be hot-dipped zinc-coated galvanized steel or stainless steel when in contact with preservative-treated wood.
      i. When used in exterior applications, bolts shall have coating types and weights in accordance with the treated wood or bolt manufacturer's rec's. A minimum of ASTM A653, type G185 zinc-coated galvanized steel (or equal) shall be used.
      ii. When used in dry interior environments in SBX/DOT or zinc borate preservative-treated wood, plain carbon screws, nuts, and washers shall be permitted.
   (g) shall not be spaced greater than 72" oc Refer to shearwall schedule for specific anchor bolt spacing requirements.
   (h) shall be placed a maximum of 12" from wall corners, wall ends, and sill plate splices (but not less than 7 dia.) , and a min. of two bolts per piece of sill plate is required.
   (i) shall be secured in place prior to foundation inspection.
5. Powder Actuated Shot Pins:
   (a) shall be installed at all interior non-bearing, non-shearwalls.
   (b) shall be 0.145x3" with 1.5" diameter steel washers.
   (c) shall not be spaced greater than 32" o.c.

REINFORCEMENT

1. Reinforcing steel shall be deformed, clean, free of rust, grease or any other material likely to impair concrete bond.
2. All bars shall conform to ASTM A615, Grade 60 minimum (UNO on structural plans). All weld wire fabric (WWF) shall conform to ASTM A185.
3. Reinforcing steel that is to be welded shall conform to ASTM A706. All welding of reinforcement shall be subject to special inspection.
4. Contractor shall take necessary steps (standard ties, anchorage devices, etc.) to secure all reinforcing steel in their true position and prevent displacement during concrete placement.
5. Fabrication, placement and installation of reinforcing steel shall conform to:
   (a) Concrete Reinforcing Steel Institute (CRSI) Manual of Standard Practice
   (b) the Governing Building Code.
6. Shop drawings for fabrication of reinforcing steel shall be approved by the Contractor and submitted to the Architect and Engineer for review and approval prior to fabrication. Shop drawings are not required for slabs-on-grade or foundations unless specifically noted on the structural plans.
7. Heating of reinforcing steel to aid in bending and shaping of bars is not permitted. All bends in reinforcing steel are to be made cold. All bend radii shall conform to CRSI Manual of Standard Practice.
8. Refer to Concrete and Masonry notes for specific minimum splice length and splice staggering requirements. Lap welded wire fabric (WWF) reinforcement two (2) modules minimum (UNO). All splices are to be staggered.

CONCRETE

1. All concrete shall have:
   (a) an ultimate compressive strength (f'c) of 3,000 psi at 28 days (UNO).
   (b) a maximum slump of 5" at point of placement.
   (c) a W/C ratio of 0.55 or less for all slabs, walls, and columns, and 0.60 or less for all foundations.
   (d) a normal dry-weight density (UNO).
2. Special inspection is NOT required as the foundations have been *designed* with f'c = 2,500 psi in accordance with the Governing Building Code, section 1705.3, exceptions 1, 2.1, and 2.3, unless explicitly specified herein, on the structural plans, or by the Building Department. At a minimum, special inspection is always required on:
   (a) structural slabs, flat plates
   (b) walls, columns, beams
   (c) piles, caissons
   (d) welding of reinforcement, installation of mechanical bar splice devices, epoxy application

   When required or specified, special inspection services shall conform to the Governing Building Code, Chapter 17 and shall be provided by an ICC certified inspector or Building Department approved engineer. The Building Department reserves the right to waive or require special inspections. Nothing in these plans waives the Building Department's right to require special inspection at any point and on any material.
3. Testing of materials used in concrete construction must be performed as noted on structural plans or at the request of the Building Department to determine if materials are quality specified. Tests of materials and of concrete shall be made by an approved agency and at the expense of the contractor; such tests shall be made in accordance with the standards listed in the Governing Building Code, Table 1705.3. When testing of concrete is required, four (4) test cylinders shall be taken from each 150 yards, or fraction thereof, poured in any one day. One (1) cylinder shall be tested at seven (7) days; two (2) at 28 days; one (1) shall be held in reserve. Where 4x8 cylinders are used, (5) test cylinders shall be taken, with (3) cylinders tested at 28 days. If Contractor elects to have additional tests performed for "early-break" results, additional test cylinders must be taken. At no time shall the Contractor instruct the testing agency to perform tests on a schedule different than above without the prior authorization of the Engineer. Contractor is responsible for complying with applicable testing requirements of theBuilding Department. Copies of all test reports shall be provided to Engineer and Building Department for review in a timely manner.
4. The Contractor shall remove and replace any concrete which fails to attain specified 28 day compressive strength if so directed by the Engineer. Any defects in the hardened concrete shall be repaired to the satisfaction of the Engineer and/or Architect or the hardened concrete shall be replaced at the Contractor's expense.
5. All concrete work shall conform with the Governing Building Code, Chapter 19.
6. All cement shall be Portland Cement Type I or II and shall conform to ASTM C150.
7. All aggregates shall conform to ASTM C33. Maximum aggregate sizes:
   (a) Footings: 1-1/2"
   (b) All other work: 3/4"
8. Where not specifically detailed, the minimum concrete cover on reinforcing steel shall be:
   (a) Permanently exposed to earth or weather
      i. Cast against earth: 3"
      ii. Cast against forms: 2"
   (b) Not exposed to earth or weather
      i. Slabs, walls, joists: 3/4"
      ii. Beams, girders, columns: 1-1/2"
9. The minimum lap splice length for all reinforcing steel shall be as noted in the typical details on sheet S-1.1. All lap splices to be staggered.
10. All reinforcing steel, anchor bolts, dowels, inserts, and any other hardware to be cast in concrete shall be well secured in position prior to foundation inspection. All hardware to be installed in accordance with respective manufacturer's specifications. Refer to architectural and structural plans for locations of embedded items.
11. Locations of all construction joints, other than specified on the structural plans, shall be approved by the Architect and Engineer prior to forming. Construction joints shall be thoroughly air and water cleaned and heavily roughened so as to expose coarse aggregates. All surfaces to receive fresh concrete shall be maintained continuously wet at least three (3) hours in advance of concrete placement. Unless specifically detailed or otherwise noted, construction and control joints shall be provided in all concrete slabs-on-grade. Joints shall be located such that the area does not exceed 400 sq. feet.
12. The Architect, Engineer and appropriate inspectors shall be notified in a timely manner for a reinforcement inspection prior to the placement of any concrete.
13. The Contractor shall obtain approval from the Architect and the Engineer prior to placing sleeves, pipes, ducts, chases, coring and opening on or through structural concrete beams, walls, floors, and roof slabs unless specifically detailed or noted on the plans. All piles or conduits passing through concrete members shall be sleeved with standard steel pipe sections.
14. The Contractor is responsible for design, installation, maintenance and removal of all formwork. Forms shall be properly constructed, sufficiently tight to prevent leakage, sufficiently strong, and braced to maintain their shape and alignment until no longer needed for concrete support. Joints in formwork shall be tightly fitted and blocked, and shall produce a finished concrete surface that is true and free from blemishes. Forms for exposed concrete shall be pre-approved by the Architect to ensure conformance with design intent.
15. Remove formwork in accordance with the following schedule:
   (a) Forms at slab edge: 1 day
   (b) Side forms at footings: 2 days
   (c) All other vertical surfaces: 7 days
   (d) Beams, columns, girders: 15 days
   (e) Elevated slabs: 28 days

   Engineer reserves the right to modify removal schedule above based on field observations, concrete conditions, and/or concrete test results.
16. Retaining walls shall not be backfilled until concrete has set a minimum of 14 days. Refer to structural plans for slab and/or framing installation sequencing.
17. All concrete (except slabs-on-grade 6" or less) shall be mechanically vibrated as it is placed. Vibrator to be operated by experienced personnel. The vibrator shall be used to consolidate the concrete. The vibrator shall not be used to convey concrete, nor shall it be placed on reinforcing and/or forms.
18. Concrete shall be maintained in a moist condition for a min. of five (5) days after placement.
19. Concrete shall not be permitted to free fall more than six (6) feet. For heights greater than six (6) feet, use tremie, pump or other method consistent with applicable standards.
20. When specified ultimate compressive strength is greater than 2500 psi, Contractor shall submit mix designs to Architect and Engineer for approval seven (7) days prior to placement. Mix designs shall be prepared by an approved testing laboratory. Sufficient data must be provided for all admixtures.
21. Refer to Architectural plans for locations of all dimensions, slab depressions, slopes, drains, curbs, and control joints.

FOUNDATIONS

1. Refer to Structural Design Parameters section on sheet S-1.1 for all soil design values used in calculations.
2. Soils values per geologic/geotechnical report (or "soils report") by Terracon Consultants Inc., Project No. 23225015, dated April 21, 2022. This report and all recommendations contained therein are to be considered a part of these plans.
3. It is the Contractor's responsibility to obtain a copy of the soils report from the Owner. A copy of the soils report shall be on the job site during the course of construction.
4. Unexpected Soil Conditions: Allowable values and subsequent foundation designs are based on soil conditions which are shown by test borings. Actual soil conditions which deviate appreciably from that shown in the test borings shall be reported to the EOR and/or soils engineer immediately.
5. All compaction, fill, backfilling and site preparation shall be performed in accordance with project soils report or the Governing Building Code Chapter 18 & Appendix J. All such work shall be performed per the recommendations of the project soils engineer.
6. Excavate to required depths and dimensions (as indicated in the drawings), cut square and smooth with firm level bottoms. Care shall be taken not to over-excavate foundation at lower elevation and prevent disturbance of soils around high elevation.
7. Foundations shall be poured in neat excavations.
8. Excavate all foundations to required depths into compacted fill or natural soil (as per plans and details) and as verified by the building official and/or soils engineer.
9. All foundations shall be inspected and approved by the appropriate building official and/or a representative of the soils engineer prior to forming and placement of reinforcing or concrete.
10. Foundations shall not be poured until all required reinforcing steel, framing hardware, sleeves, inserts, conduits, pipes, etc. and formwork is properly placed and inspected by the appropriate building official/inspector(s).
11. It is the responsibility of the contractor in charge of framing to properly position all holdown bolts, anchor bolts, column bases, and all other cast-in-place hardware. Refer to typical details. All hardware to be secured prior to foundation inspections.
12. The sides and bottoms of dry excavations must be moistened to optimum moisture content or just above, just prior to placing concrete. Conversely, de-water footings as required to remove standing water and to maintain optimum working conditions.
13. The Contractor shall be solely responsible for all excavation procedures including lagging, shoring, and the protection of adjacent property, structures, streets, and utilities in accordance with all federal, state and local safety ordinances. The Contractor shall provide for the design and installation of all cribbing, bracing and shoring required.

COLD-FORMED METAL FRAMING

1. All material and workmanship shall conform to AISI "Specifications for the Design of Cold Formed Steel Structural Members", latest edition.
2. All shapes including metal studs, joists, track, etc. shall be fromed from steel that meets the requirements of the following, U.N.O:
   a) 16 ga. and Heavier (54 mils and thicker), 50 ksi Min. Yield Strength
      i. Painted steel - ASTM A570 Grade 50 or ASTM A607 Grade 50
      ii. Galvanized steel - ASTM A446 Grade D
   b) 18 ga. and Lighter (43 mils and thinner), 33 ksi Min. Yield Strength
      i. Painted Steel - ASTM A570 Grade 33 or ASTM A611 Grade C
      ii. Galvanized Steel - ASTM A446 Grade A
3. All miscellaneous steel shall conform to the following, U.N.O.:
   a) 16 ga. and Heavier (54 mils and thicker) - 50 ksi Min. Yield Strength
   b) 18 ga. and Lighter (43 mils and thinner) - 33 ksi Min. Yield Strength
4. All welds (fillet, butt, seam, etc.) shall be performed by a certified light gage steel welder, certified for all appropriate directions per AWS D1.3. Electrodes shall confrom to the following:
   a) 20 ga. to 18 ga. (33 mils to 43 mils) sheet to sheet - E60XX
   b) 16 ga. and heavier (54 mils and thicker) sheet to sheet - E70XX or E6013
   c) No welding shall be performed on any section thinner than 20 ga. (thinner than 33 mils).
5. Specified fasteners shall be used unless notified in writing as to an acceptable substitution and include the following, U.N.O.:
   a) Section to section (sheet to sheet) - Self drilling/tapping sheet metal screws as manufactured by Simpson Strongtie - X, TRSD, or PHSD series or approved equal.
   b) Plywood to section (plywood to sheet) Self drilling/tapping plywood screws as manufactured by Simpson Strongtie (PPSD series) or Grabber Plywood Screws, or approved equal.
   c) Light gage connectors to sections (connector to sheet) - self drilling/tapping sheet metal screws as manufactured by Simpson Strongtie - C-CFS10 series or approved equal.
   d) Powder-Actuated or Power-Driven Fasteners (or "Shot Pins"):
      i. Shall be by ITW Ramset, Hilti Inc., Simpson Strong-Tie or approved equal. Product and installation shall be per the manufacturer's respective ICC report: ICC ESR-1799 (Ramjet), ESR-1663 (Hilti), ER-4546 (Simpson), or per approved equal.
      ii. Shank diameter of shot-pins shall be 0.145" min., with a min. 3/4" diameter washer and 1 1/4" embedment UNO.
      iii. Shotpins may be used for attachment of miscellaneous furring,framing, and non-shearwalls to concrete or masonry. (Anchor bolts or other connectors must be used for sill plates in shearwalls.)
   e) Mechanical Fasteners:
      i. Sheet Metal Screws (SMS):
         a. Use ASTM C1513, corrosion-resistant-coated, self-drilling, self-tapping steel drill screws.
         b. Use low-profile head beneath sheathing, manufacturer's standard head elsewhere.
         c. Screw length must be such that the entire pointed end extends beyond the interior face of the innermost member connected, with a minimum of three (3) threads exposed.
         d. Minimum end, edge, & spacing distances in steel members shall be as follows :
            i) #8 SMS = 1/2"
            ii) #10 SMS = 5/8"
            iii) #12 SMS = 3/4"
6. Wire tying of framing components shall not be permitted.
7. All studs shall be punched (i.e. with spacings @ 24" oc) U.N.O.
8. All calculated stud properties shall be shall per AISI "Specifications for the Design of Cold Formed Steel Structural Members" based on the following minimum thickness table:

Reference Gage Designation	(mils)	Minimum Material Thickness (in.)
25	18	0.0179
22	27	0.0269
20-Drywall	30	0.0296
20-Structural	33	0.0329
18	43	0.0346
16	54	0.0538
14	68	0.0677
12	97	0.0966
10	118	0.1180

9. Lateral bracing for steel studs is required when wall board or sheathing does not continue full height on both sides. Bridging shall be installed per manufacturer's recommendations unless specifically shown otherwise on these plans.
10. Wall Installation:
   (a) Install continuous top and bottom tracks sized to match wall. Align tracks accurately and securely anchor at corners and ends, and at spacing matching stud spacing.
   (b) Squarely seat wall against top and bottom tracks with gap not exceeding 1/8 inch between the end of wall framing member and the web of track. Fasten all studs to top and bottom tracks. Space tube studs as indicated on the drawings, however spacing shall not be greater than 24" on-center.
   (c) Set walls plumb, except as required for nonplumb walls, warped surfaces, and similar configurations.
   (d) Fill joints between adjacent wall panels with Dow Great Stuff construction adhesive prior to the installation of any roof or floor framing which would surcharge those walls.
   (e) Install headers per plan over wall openings wider than stud spacing. Locate headers above openings as indicated. Where indicated, fabricate headers using light gage elements to transfer load to supporting studs, complete with clip-angle connectors, web stiffeners, and/or gusset plates.
   (f) Install runner tracks and jack studs above and below wall openings. Anchor tracks to jamb studs with screws, clip angles, or by welding. Space jack studs to match full-height wall studs.
   (g) Align floor and roof framing over studs. Where framing cannot be aligned, continuously reinforce track to transfer loads.
   (h) Anchor studs abutting structural columns or walls, including masonry walls, to supporting structure as indicated.
   (i) Install supplementary framing, blocking, and bracing in stud framing indicated to support fixtures, equipment, services, casework, heavy trim, furnishings, and similar work requiring attachment to framing.
   (j) If type of supplementary support is not indicated, comply with stud manufacturer's written recommendations and industry standards in each case, considering weight or load resulting from item supported.
   (k) Install miscellaneous framing and connections, including supplementary framing, web stiffeners, clip angles, continuous angles, anchors, and fasteners, to provide a complete and stable wall-framing system.
   (l) Expansion Anchors: Use only where specifically detailed on the drawings or approved by the Owner or Owner's representative. Refer to the manufacturer's ICC Evaluation Report for materials and installation requirements.
11. Field Quality Control
   (a) Field and shop welds shall be subject to special inspection.
   (b) Remove and replace work where test results indicate that it does not comply with specified requirements.
   (c) Provide final protection and maintain conditions, in a manner acceptable to Manufacturer and Installer, that ensure that cold-formed metal framing is without damage or deterioration at time of substantial completion.

Released for Permit
10/06/2023 9:02:49 AM
Pikes Peak REGIONAL Building Department
Christineh
CONSTRUCTION

Ashley&Vance ENGINEERING, INC.
9555 Ralston Road, Unit 201
Arvada, CO 80002
(303) 755-9762
www.ashleyvance.com
CIVIL • STRUCTURAL

The use of these plans and specifications shall be restricted to the original site for which they were prepared and publication thereof is expressly limited to such use. Reproduction or publication by any method, in whole or in part, is prohibited. Title to these plans and specifications remain with Ashley & Vance Engineering, Inc. without prejudice. Visual contact with these plans and specifications shall constitute prima facie evidence of the acceptance of these restrictions.

Engineer of Record:

COLORADO LICENSED
CHARLES R. VANCE
51504
PROFESSIONAL ENGINEER

Prospect Lake Pumphouse

Prospect Lake Drive,
Colorado Springs, CO 80910

Revision:

1	Plan Check	13 Sept. 2023

Proj. Engr.: MVI	Phone Ext.:
Proj. Mngr.: RMF	Phone Ext.: 115
Date: 17 Feb. 2023	Scale: NTS
A&V Job No.: 221743	

STRUCTURAL SPECIFICATIONS

S-1.2

DO NOT SCALE THESE DRAWINGS - Refer to Architectural plans for all dimensions.

Sep 13, 2023
2:09:22 PM

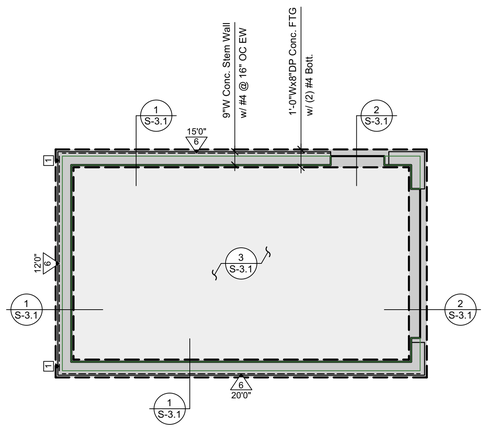

N

FOUNDATION PLAN

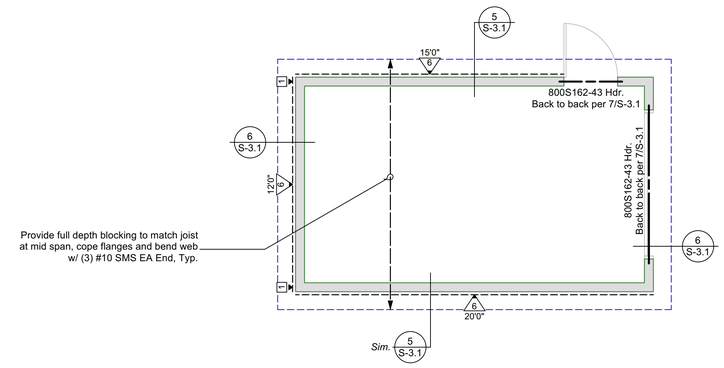

N

ROOF FRAMING PLAN

GENERAL FOUNDATION NOTES

Foundations per Governing Building Code, Table 1806.2
At the request of the client (or client's agent), Ashley & Vance Engineering has designed the foundations in conformance with Table 1806.2. If the building official determines that expansive soils are present, or other geologic issues of concern, then they may require that special provisions be made to the foundation design to safeguard against damage due to the expansiveness or due to other geologic issues. If this becomes the situation, all foundation construction must be halted and the client, at their own expense, shall: (a) obtain a soils report prepared by a Soils Engineer licensed in the state of the project; (b) commission Ashley & Vance Engineering to revise the foundation plans and details, and framing plans if necessary, to reflect the recommendations of the soils report; (c) submit the revised plans to the Building Department for approval.

Required frost depth of the bottom of footings is 3'-6" below finished grade.

See General Notes & Specifications for additional requirements and material specifications.

All dimensions per Architectural plans

Contractor to VERIFY all dimensions w/ Architectural plans PRIOR to commencement of construction.

Foundation & Stem per Plan & Details

5" Slab-on-Grade w/
#4 @ 18" oc, per Plan & Details

GENERAL FRAMING NOTES

Beams (per Call-out)

Roof sheathing to be 5/8" plywood, PI 40/20, screwed w/ #10 SMS at 6",12"

Roof Joists -- 800S162-54 [33]
w/ web stiffener EA end @ 24" OC

Waterproofing, flashing, & finish details per Architecturals.

See General Notes & Specifications for additional requirements and material specifications.

All dimensions per Architectural plans

Contractor to VERIFY all dimensions w/ Architectural plans PRIOR to commencement of construction.

WALL SCHEDULE

Stud wall locations per Architecturals.

CFS Framed Wall, 600S162-43 [50] @ 24" OC

(align studs with roof joists above.)

All Walls to have Continuous Top Track, All Splices to be per Detail **4/S-3.1**

HOLDOWN SCHEDULE

TYPE	HOLDOWN [1]	MIN. POST	ANCHOR / EMBEDMENT	DETAILS
1	S/HDU4 w/ (6) #14 Screws	Dbl. Stud BTB	Per Details	8/S-3.1

Released for Permit
10/06/2023 9:02:51 AM
Pikes Peak REGIONAL Building Department
Christineh
CONSTRUCTION

SHEARWALL SCHEDULE

All Values Conforming to the 2021 IBC

DESCRIPTION			FASTENING[2,3]		FRAMING/[7,11] TRACK/BLKG THICKNESS	TRACK CONNECTION (1493#)	(630#)	(520#)	
No.	MATERIALS[1]	2 SIDES[8]	SIZE	PANEL EDGE		5/8"[5,12] A.B.	#10 [4] S.M.S.	PPSD[4] Scew	VALUE (plf)
6	7/16" OSB	N	#8	6"	33 mils.	54"	24"	18"	280

FOOTNOTES:

1. 15/32" Structural 1 plywood sheathing may be substituted for 7/16" OSB in the schedule above.
2. All fasteners shall be #8 flat-head self-drilling/tapping screws with a minimum head diamter of 0.285in. All "field" fastening shall be #8 self drilling/tapping screws at 12" o.c., U.N.O.
3. Fasteners shall have minimum 3/8" edge distance.
4. Fasteners through upper wall base track into sheathing and track blocking/rim below shall be Simpson PPSD screws, 1-15/16" long. Fasteners from track blocking/rim to top track below shall be Simpson TRSD #10x3/4" sheet metal screws. DO NOT OVERDRIVE. Where mutiple rows are indicated, they shall be staggered.
5. All shearwalls to have 5/8" AB's with standard cut washers, minimum. All base tracks shall have 2 bolts minimum, with 1 bolt located within 6" and 12" of each end of wall and/or track.
6. Base tracks on masonry or concrete shall be galvanized.
7. Minimum framing size shall be 3-1/2" deep, with 1-5/8" wide flanges, 33 mils. minimum thickness. This shall apply to all studs and blocking. Tracks shall have a minimum flange width of 1-1/4" U.N.O.. Block all panel edges. Blocking may be replaced with flat strap, 1-1/2" minimum width, attached directly to studs with 1-#10 S.M.S. Maximum stud spacing shall not exceed 24" o.c.
8. Single sided shearwalls may be placed on EITHER side of wall panel.
9. Plywood panels shall butt along centerlines of framing members with 1/16" gap between panels. Minimum plywood dimension for shearwall shall be 12".
10. Track Blocking/Rim below all walls shall match the thickness of the joist or wall framing below, whichever is greater.
11. At all exterior walls and interior bearing walls not noted as shearwalls, blocking shall be provided between joists and rafters. Non-shear walls at foundations shall have 5/8" diameter AB's at 60" o.c., maximum. Interior partitions and non-shearwalls may be fastened to the slab with 0.145" diameter x 1-1/2" powder driven fasteners @24"o.c. maximum.
12. Wall length shown on these plans is the minimum required by calculation. Actual wall lengths may be longer than that shown. In no case shall the sheathed length be less than that indicated, contractor shall contact the engineer if such discrepancy occurs.
13. All new exterior wall construction not specifically indicated as a shearwall shall be sheathed and nailed per wall Type 6 per the schedule.

Ashley&Vance ENGINEERING, INC.
9555 Ralston Road, Unit 201
Arvada, CO 80002
(303) 755-9762
www.ashleyvance.com
CIVIL • STRUCTURAL

The use of these plans and specifications shall be restricted to the original site for which they were prepared and publication thereof is expressly limited to such use. Reproduction or publication by any method, in whole or in part, is prohibited. Title to these plans and specifications remain with Ashley & Vance Engineering, Inc. without prejudice. Visual contact with these plans and specifications shall constitute prima facie evidence of the acceptance of these restrictions.

Engineer of Record:

COLORADO LICENSED
CHARLES R. ASHLEY
51504
PROFESSIONAL ENGINEER

Prospect Lake Pumphouse

Prospect Lake Drive,
Colorado Springs, CO 80910

Revision:

1	Plan Check	13 Sept. 2023

Proj. Engr.: MVI Phone Ext.:
Proj. Mngr.: RMF Phone Ext.: 115
Date: 17 Feb. 2023 Scale: 1/4"=1'-0"
A&V Job No.: 221743

FOUNDATION & ROOF FRAMING PLANS

S-2.1

DO NOT SCALE THESE DRAWINGS. Refer to Architectural plans for all dimensions.

Sep 13, 2023
Prospect Lake PH

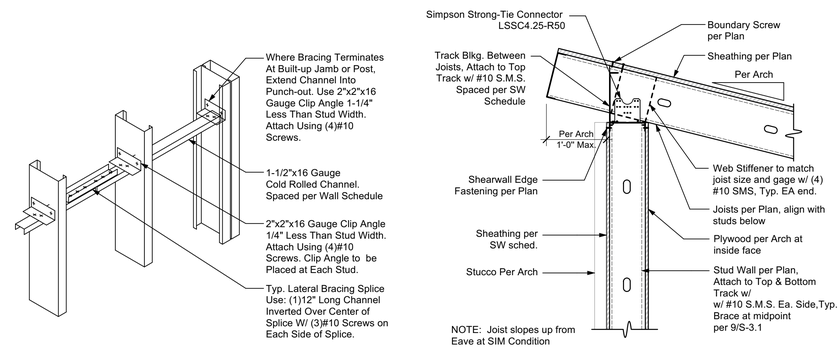

5 JOISTS AT EXTERIOR WALL

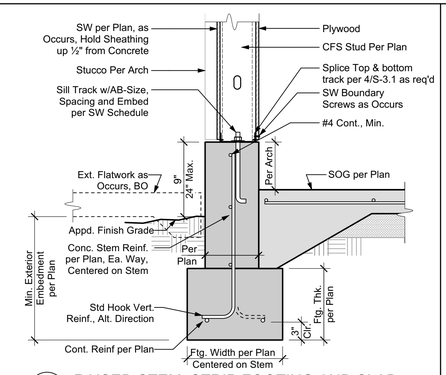

1 RAISED STEM, STRIP FOOTING AND SLAB

17 NOT USED

13 NOT USED

9 TYPICAL STUD WALL BRACING

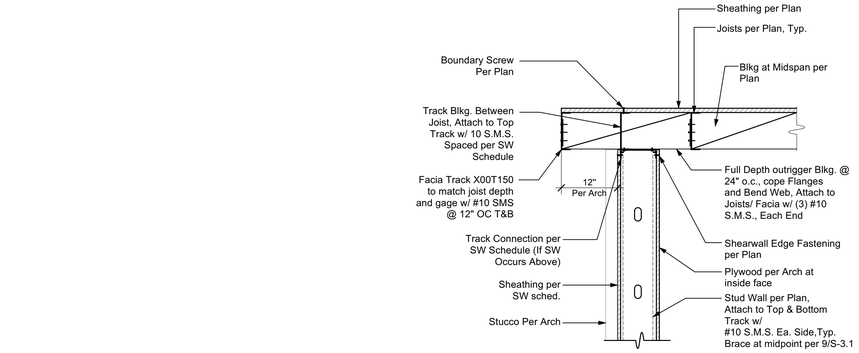

6 JOISTS AT EXTERIOR WALL

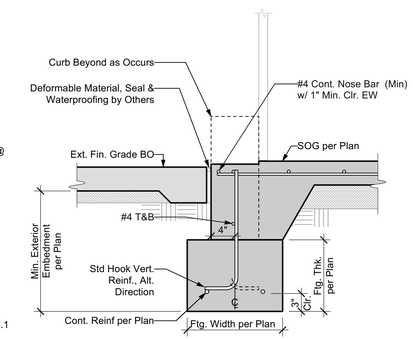

2 FOUNDATION AT GARAGE OPENING

18 NOT USED

14 NOT USED

10 NOT USED

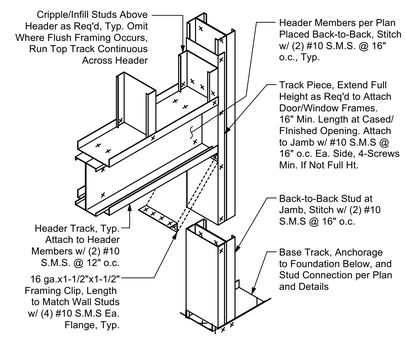

7 TYPICAL FRAMED OPENING <6'-0" WIDE

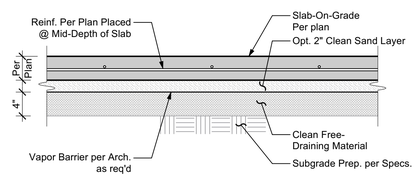

3 TYP. SLAB ON GRADE

19 NOT USED

15 NOT USED

11 NOT USED

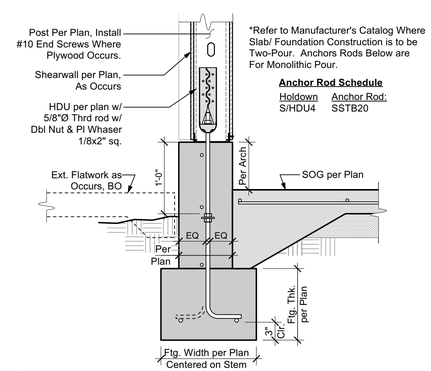

*Refer to Manufacturer's Catalog Where Slab/ Foundation Construction is to be Two-Pour. Anchors Rods Below are For Monolithic Pour.

Anchor Rod Schedule

Holdown	Anchor Rod:
S/HDU4	SSTB20

8 HOLDOWN TO FOUNDATION

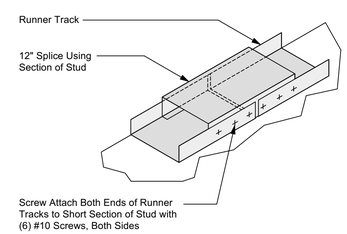

4 TYPICAL TRACK SPLICE

20 NOT USED

16 NOT USED

12

Released for Permit
10/06/2023 9:02:54 AM
Pikes Peak Regional Building Department
Christineh
CONSTRUCTION

Sep 13, 2023
3:05:24 PM

Ashley&Vance ENGINEERING, INC.
9555 Ralston Road, Unit 201
Arvada, CO 80002
(303) 755-9762
www.ashleyvance.com
CIVIL • STRUCTURAL

The use of these plans and specifications shall be restricted to the original site for which they were prepared and publication thereof is expressly limited to such use. Reproduction or publication by any method, in whole or in part, is prohibited. Title to these plans and specifications remain with Ashley & Vance Engineering, Inc. without prejudice. Visual contact with these plans and specifications shall constitute prima facie evidence of the acceptance of these restrictions.

Engineer of Record:

COLORADO LICENSED
CHARLES R. ASHLEY
51504
PROFESSIONAL ENGINEER

Prospect Lake Pumphouse

Prospect Lake Drive,
Colorado Springs, CO 80910

Revision:

1	Plan Check	13 Sept. 2023

Proj. Engr.: MVI	Phone Ext.:
Proj. Mngr.: RMF	Phone Ext.: 115
Date: 17 Feb. 2023	Scale: NTS
A&V Job No.: 221743	

STRUCTURAL DETAILS

S-3.1

DO NOT SCALE THESE DRAWINGS. Refer to Architectural plans for all dimensions.

Ashley & Vance
ENGINEERING, INC

9555 Ralston Rd, Unit 201
Arvada, CO

(303) 755-9762

STRUCTURAL CALCULATIONS:

IN RESPONSE TO:

Plan Check Comments

PROJECT NO.:
221743

PROJECT NAME:
Prospect Lake Pumphouse

PROJECT TYPE:
New Construction
Single-Story, Residential Building

PROJECT ADDRESS:
Prospect Lake Drive
Colorado Springs, CO 80910

ARCHITECT:
Just Architecture and Design
9815 Westbury Ct.
Highlands Ranch, CO 80129

PROJECT ENGINEER:
Rollston Frangopoulos, PE

DATE:
September 13, 2023

COLORADO LICENSED
CHARLES R. ASHLEY
51504
PROFESSIONAL ENGINEER

TABLE OF CONTENTS

DESIGN PARAMETERS	A.1 -	A.3
Loading Information		A.2
Seismic Parameters		A.3
ROOF FRAMING	1.1 -	1.4
Roof Framing Layout		1.1
Beam Calculations		1.2
LATERAL ANALYSIS	2.1 -	2.7
Seismic Forces		2.1
Wind Forces		2.3
Shearwall Layouts		2.4
Shearwall Forces		2.5
Redundancy Factor Calculation		2.6
Overturning Forces		2.7
FOUNDATIONS	3.1 -	3.2
Foundation Layout		3.1
Continuous Footing Calculations		3.2

Ashley & Vance ENGINEERING, INC

DESIGN PARAMETERS

Code: 2015 IBC

Design Materials :
(Please refer to General Notes & Specifications for more detailed information)

Foundations:

Concrete	2500 psi
Rebar	60 ksi

Steel :

CFS Joists & Studs	33 ksi

Note:
The intent of lateral design is to prevent structural failures, in the event of seismic activities or high-winds, but not to prevent the damage of architectural finishes or systems. The lateral calculations herein conform to the specifications of International Building Code (IBC). Ashley & Vance Engineering Inc. provides no guarantees, expressed or implied, as to the adequacy of the IBC provisions.

These calculations, specifications, details and drawings are instruments of service and are the property of Ashley & Vance Engineering Inc. The information contained herein is for use on the specific project referenced above and shall not be used otherwise without the written authorization of Ashley & Vance Engineering Inc.

Ashley&Vance
ENGINEERING, INC

Job: **221743 - Prospect Lake Pumphouse - EcoResource Solutions** **Load Sheet**

ROOF LOADS

Typical Roof Live Loads		20.0 psf
Snow Load	**Ps = 0.7·Ce·Ct·I·Cs·Pg**	
Ground Snow Load: psf		45.0 psf
Exposure Factor: Ce		1.0 psf
Thermal Factor: Ct		1.2 psf
Importance Factor: I		1.0 psf
Roof Slope Factor: Cs		1.0 psf
Minimum Roof Snow Load per Jurisdiction		30.0 psf
		37.8 psf
Typical Roof Dead Loads		
Standing Seam Metal		1.5 psf
5/8" Plywood		2.0 psf
CFS Joist Framing		2.3 psf
Batt Insulation		0.8 psf
5/8" Gyp. Board Ceiling		2.8 psf
Misc. Mechanical / Solar		5.6 psf
Total Dead Load		15.0 psf
Wall Dead Weight		34 psf

Ashley & Vance ENGINEERING, INC

SEISMIC DESIGN PARAMETERS

Criteria:

Building Code: ASCE7-16
Site Latitude: 38.82382
Site Longitude: -104.80089
Risk Category: II
Soil Classification: D

Ground Motion Values:

S_S: 0.203 S_1: 0.058
F_a: 1.600 F_v: 2.400
S_{MS}: 0.325 S_{M1}: 0.139
S_{DS}: 0.217 S_{D1}: 0.093

(Ss & S_1 Taken From Raw USGS Data)

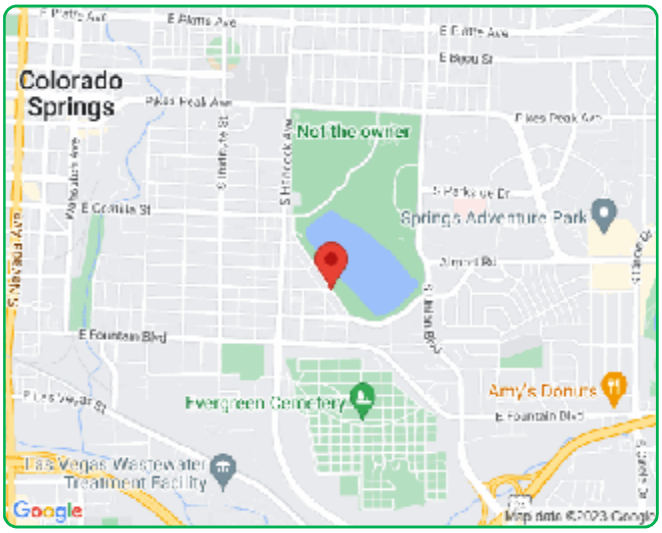

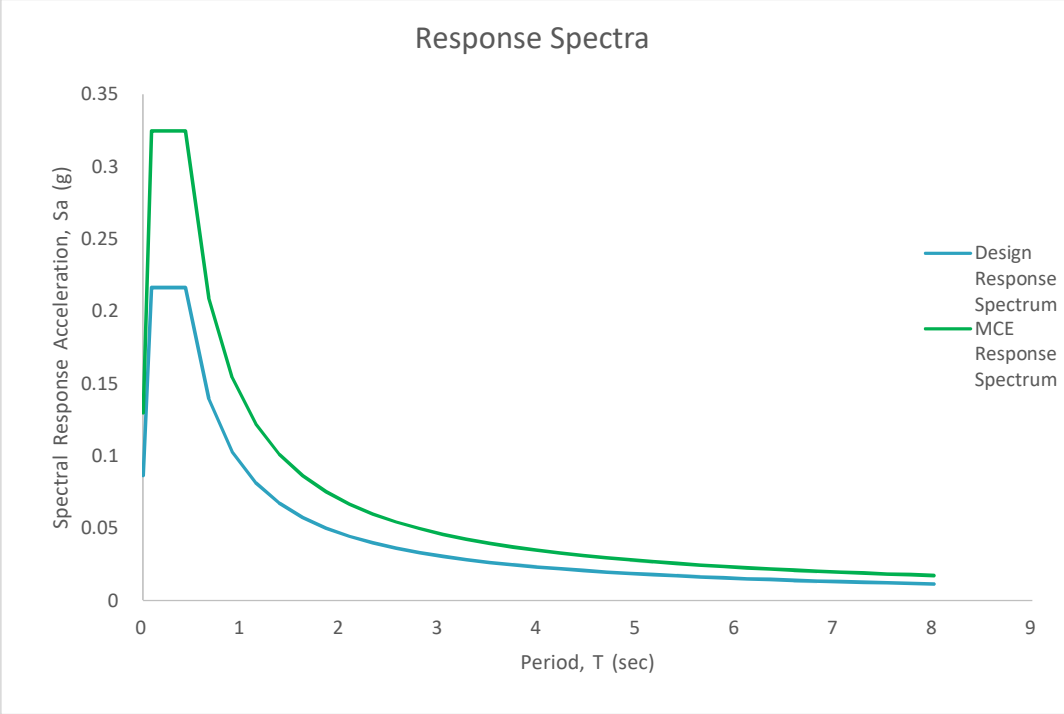

Ashley&Vance ENGINEERING, INC.

Prospect Lake Pumphouse

Prospect Lake Drive,
Colorado Springs, CO 80910

Job No.: **221743**

Roof Framing Layout

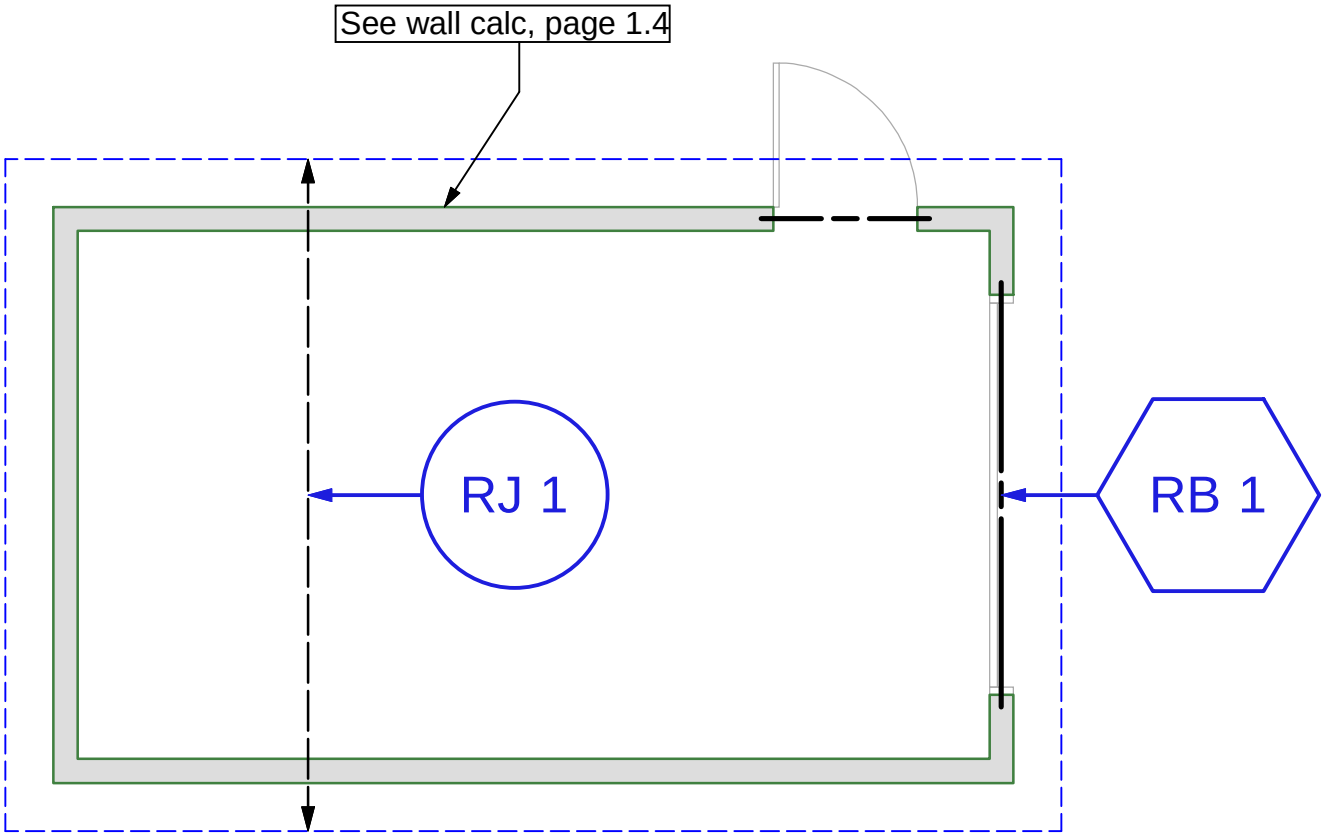

SCAFCO Steel Stud Mfg.

2007 North American Specification [AISI S100] ASD
DATE: 10/02/2023
221743 - Prospect Lake - RB1

SECTION DESIGNATION: 800S162-43 [33] Single

Input Properties:

Web Height =	8.000 in	Design Thickness =	0.0451 in
Top Flange =	1.625 in	Inside Corner Radius =	0.0712 in
Bottom Flange =	1.625 in	Yield Point, Fy =	33.0 ksi
Stiffening Lip =	0.500 in	Fy With Cold-Work, Fya =	33.0 ksi
Punchout Width =	1.500 in	Punchout Length =	4.000 in

Header/Beam Solver Design Data - Simple Span

Header/Beam Span 8.50 ft Deflection Limit L/360
Dead Load = 15.0 lb/ft DL Multiplied by 1.00 for Strength Checks
Live Load = 37.8 lb/ft LL Multiplied by 1.00 for Strength Checks

Check Flexure

Input Flexural Bracing: None
Cb = 1.14
Fe = 16.4 ksi Fy = 33.0 ksi Fe <= 0.56 Fy
Fc = 16.4 ksi Sc = 1.105 in^3 Sf = 1.158 in^3 Mn = 1506 Ft-Lb
Mmax = 477 Ft-Lb <= Ma = 902 Ft-Lb

Check Deflection

Deflection Limit: L/360
Maximum Deflection = 0.046 in Deflection Ratio = L/2196

Check Shear

Vmax = 224 lb (Including Flexural Load Multiplier)
Shear capacity not reduced for punchouts near ends of member
Va = 1051 lb >= Vmax

Check Web Crippling

Rmax = 224 lb (Including Flexural Load Multiplier)
Web Crippling capacity not reduced for punchouts near ends of member
End Bearing Length = 1.00 in
Ra = 247 lb >= Rmax, stiffeners not required

SCAFCO Steel Stud Mfg.

2007 North American Specification [AISI S100] ASD
DATE: 10/02/2023
221743 - Prospect Lake - RJ1

SECTION DESIGNATION: 800S162-54 [33] Single

Input Properties:

Web Height =	8.000 in	Design Thickness =	0.0566 in
Top Flange =	1.625 in	Inside Corner Radius =	0.0849 in
Bottom Flange =	1.625 in	Yield Point, Fy =	33.0 ksi
Stiffening Lip =	0.500 in	Fy With Cold-Work, Fya =	33.0 ksi
Punchout Width =	1.500 in	Punchout Length =	4.000 in

Ceiling Solver Design Data - Simple Span

Joist Span 11.00 ft Deflection Limit L/360
Joist Spacing 24.0 in
Dead Load = 15.0 psf DL Multiplied by 1.00 for Strength Checks
Live Load = 37.8 psf LL Multiplied by 1.00 for Strength Checks

Check Flexure

Input Flexural Bracing: Mid-Pt
Cb = 1.30
Fe = 43.6 ksi Fy = 33.0 ksi 0.56 Fy < Fe < 2.78 Fy
Fc = 29.0 ksi Sc = 1.353 in^3 Sf = 1.434 in^3 Mn = 3265 Ft-Lb
Mmax = 1597 Ft-Lb <= Ma = 1955 Ft-Lb

Check Deflection

Deflection Limit: L/360
Maximum Deflection = 0.206 in Deflection Ratio = L/640

Check Shear

Vmax = 581 lb (Including Flexural Load Multiplier)
Shear capacity not reduced for punchouts near ends of member
Va = 2091 lb >= Vmax

Check Web Crippling

Rmax = 581 lb (Including Flexural Load Multiplier)
Web Crippling capacity not reduced for punchouts near ends of member
End Bearing Length = 1.00 in
Ra = 379 lb < Rmax, STIFFENERS REQUIRED

SCAFCO Steel Stud Mfg.

2007 North American Specification [AISI S100] ASD
DATE: 2/7/2023

SECTION DESIGNATION: 600S162-43 [50] Single

Input Properties:

Web Height =	6.000 in	Design Thickness =	0.0451 in
Top Flange =	1.625 in	Inside Corner Radius =	0.0712 in
Bottom Flange =	1.625 in	Yield Point, Fy =	50.0 ksi
Stiffening Lip =	0.500 in	Fy With Cold-Work, Fya =	50.0 ksi
Punchout Width =	1.500 in	Punchout Length =	4.000 in

Wall Solver Design Data - Simple Span

Wall Height 12.00 ft — Deflection Limit L/120
Lateral Pressure 25.00 psf — Axial Load 581 lb
Stud Spacing 24.0 in

Check Flexure

Load Multiplier for Flexural Strength = 1.00
Input Flexural Bracing: Mid-Pt — Cb = 1.30
Fe = 39.2 ksi — Fy = 50.0 ksi — 0.56 Fy < Fe < 2.78 Fy
Fc = 35.9 ksi — Sc = 0.769 in^3 — Sf = 0.772 in^3 — Mn = 2298 Ft-Lb
Mmax = 900 Ft-Lb <= Ma = 1376 Ft-Lb

Check Deflection

Deflection Limit: L/120
Load Multiplier for Deflection = 0.70
Maximum Deflection = 0.239 in — Deflection Ratio = L/602

Check Shear

Vmax = 300 lb (Including Flexural Load Multiplier)
Shear capacity not reduced for punchouts near ends of member
Va = 1416 lb >= Vmax

Check Web Crippling

Rmax = 300 lb (Including Flexural Load Multiplier)
Web Crippling capacity not reduced for punchouts near ends of member
End Bearing Length = 1.00 in
Ra = 393 lb >= Rmax, stiffeners not required

Check Axial Interactions

P = 581 lb (Including Axial Load Multiplier)
Axial Loads Multiplied by 1.00 for Interaction Checks
Axial Bracing = Sheathed per 2007 Wall Stud Std.
1/2 in. shth'g with #6 screws 12 in. oc. — Max KL/r = 63
Allowable Pure Axial Load, Pa = 3222 lb : Axial Load Ratio, P/Pa = 0.180
K-phi for Distortional Buckling = 0 lb*in/in

Check Equation C5.2.1-1
Cmx = 1.00
Pcr = 32516 lb — Alpha = 0.966
Equation C5.2.1-1 = 0.858

Check Equation C5.2.1-2
Pao = 5886 lb
Equation C5.2.1-2 = 0.753

Maximum Interaction = 0.858 <=1.0

Ashley & Vance ENGINEERING, INC

ASD Lateral Force Analysis
2015 IBC

Job: 221743 - Prospect Lake Pumphouse - EcoResource Solutions

SEISMIC DESIGN BASE SHEAR (STATIC)

Risk Category: II (IBC Table 1604.5)

I_e = 1.00 (ASCE Table 1.5-2)

R = 6.5 (ASCE Table 12.2-1) Ω_o = 2.5 (ASCE Table 12.2-1)

C_d = 4 (ASCE Table 12.2-1) Reduced by 1/2 for flexible diaphragms per ASCE Table 12.2-1 footnote b

SEISMIC GROUND MOTION VALUES

Latitude: 38.8238164

Longitude: -104.80089

Site Classification = D Soils Report? **No** Fa Min = 1.2 per 1613.2.3

Short Period			Long Period		
S_S =	0.203		S_1 =	0.058	
F_a =	1.600	(IBC Table 1613.2.3(1))	F_v =	2.400	(IBC Table 1613.2.3(2))
S_{MS} =	0.325	(IBC Eq. 16-36)	S_{M1} =	0.139	(IBC Eq. 16-37)
S_{DS} =	0.217	(IBC Eq. 16-38)	S_{D1} =	0.093	(IBC Eq. 16-39)

APPROXIMATE FUNDAMENTAL PERIOD

Building Type: All Other Structural Systems

Maximum Height = 13.0 ft

T_a = 0.14 sec (ASCE Eq. 12.8-7) T_L = 8 sec (ASCE Figure 22-14)

T_0 = 0.09 sec (ASCE 11.3)

T_S = 0.43 sec (ASCE 11.3)

SEISMIC DESIGN CATEGORY

SDC = B (ASCE 11.6)

SEISMIC BASE SHEAR

C_S = 0.0333 Govs (ASCE Eq. 12.8-2)

$C_{S\ MAX}$ = 0.1043 (ASCE Eq. 12.8-3 & Eq. 12.8-4)

$C_{S\ MIN}$ = 0.0100 (ASCE Eq. 12.8-5 & Eq. 12.8-6)

C_S = 0.0333

V = 0.033*W

Ashley & Vance ENGINEERING, INC

Job: 221743 - Prospect Lake Pumphouse ASD Lateral Force Analysis 2015 IBC

C_S :	0.033	
k =	1.00	(ASCE Eq. 12.8-12)

VERTICAL SEISMIC FORCE DISTRIBUTION (ASCE 12.8.3)

Level	Height (ft)	DL (psf)	PL (psf)	Floor Area (sq.ft.)	Weight (lbs)	wh^k (k-ft)	C_V (12.8-12)	Story Shear (lbs)	Story Shear (psf)	% Total
Roof	11.0	15.0	30.0	240	10800	118.8	1.000	360	1.5	100.0%
				Totals:	10800	118.8	1.0	**360**	1.5	

DIAPHRAGM LOADS (ASCE 12.10)

		NORTH-SOUTH DIRECTION					EAST-WEST DIRECTION				
Level	DL (psf)	PL (psf)	(12.10-1) (psf)	Max (psf)	Min (psf)	Gov (psf)	PL (psf)	(12.10-1) (psf)	Max (psf)	Min (psf)	Gov (psf)
Roof	15	30	1.4991	3.9	1.9	1.9	30	1.5	3.9	1.9	1.9

Ashley&Vance ENGINEERING, INC

Job: 221743 - Prospect Lake Pumphouse - EcoResource Solutions

ASCE 7 CHAPTER 27 MWFRS DIRECTIONAL PROCEDURE PART 1: ENCLOSED, PARTIALLY ENCLOSED & OPEN BLDGS OF ALL HEIGHTS

Building Type and Wind Parameters:

# of Stories	1	
Risk Category =	II	
Exposure Category =	C	(26.7.3)
Enclosure:	Enclosed	
GC_{pi}	NA	(26.13-1)
=	w. 0% differential opening	

Building Dimensions Governing Wind Calculations:

	Max.	Min.	Mean
Roof Height (h)=	13 ft	8 ft	**11 ft**
Dist. Btwn h_{min} & h_{max} =	5 ft		
Roof Pitch =	3.0 :12	or 14.0 °	

	Major Dim	H/L	L/B
Plan N-S Dimension:	14 ft	0.75	1.57
Plan E-W Dimension:	22 ft	0.48	0.64

Main Wind Force:

V_{ult} =	130 mph	(Figure 1609.3(1))
V_{asd} =	101 mph	
K_{zt} =	1.00	(26.8)
Site Elevation =	0 ft	*Zero is conservative*
K_e =	1.00	
I_w =	1.00	Table 1.5-2
Analysis Type =	Main Wind Force Resisting Sytem	
K_d =	0.85	Table 2
K_h=	0.85	Table 26.10-1
Leeward Pressure q_h =	31 psf	(26.10-1)
$C_{p,z}$ =	0.8	(Figure 27.3-1)

Building Character:

Lateral Force Resisting System =	Light Framed Bldg	
Structure Type =	Rigid	(C26.2)
Diaphragm Type =	Flexible	(26.2)

G = 0.85 (26.11.1) **WND DISTRIBUTION ON WALLS ORIENTED NORTH-SOUTH** **Torsion Inc.=** **0%**

Roof Type = Monoslope

$h_{parapet}$= 0.0 ft

	Height	Trib	(26.10-1) K_z	q_z	(27.3-1) $C_{p,h}$	p_z	$p_{h,horiz}$	p_{pi}	Σp	Parapets	p_p	Σp	Σp*(1+T	0.6 x Total $Σp_T$
Roof	11 ft	5 ft	0.8	31 psf	-0.5		-3 psf	0 psf	8 psf			327 plf	327 plf	**196 plf**
Upr Wall	8 ft	9 ft	0.8	31 psf	-0.4	21 psf	-11 psf	0 psf	32 psf	None	--			

G = 0.85 (26.11.1) **WND DISTRIBUTION ON WALLS ORIENTED EAST-WEST** **Torsion Inc.=** **0%**

Roof Type = Monoslope

$h_{parapet}$= 0.0 ft

	Height	Trib	(26.10-1) K_z	q_z	(27.3-1) $C_{p,h}$	p_z	$p_{h,horiz}$	p_{pi}	Σp	Parapets	p_p	Σp	Σp*(1+T	$Σp_T$
Roof	11 ft	5 ft	0.8	31 psf	-0.7		-4 psf	0 psf	8 psf			350 plf	350 plf	**210 plf**
Upr Wall	8 ft	9 ft	0.8	31 psf	-0.5	21 psf	-13 psf	0 psf	34 psf	None	--			

Ashley&Vance ENGINEERING, INC.

Prospect Lake Pumphouse
Prospect Lake Drive,
Colorado Springs, CO 80910

Job No.: **221743**

Upper Shearwall Layout

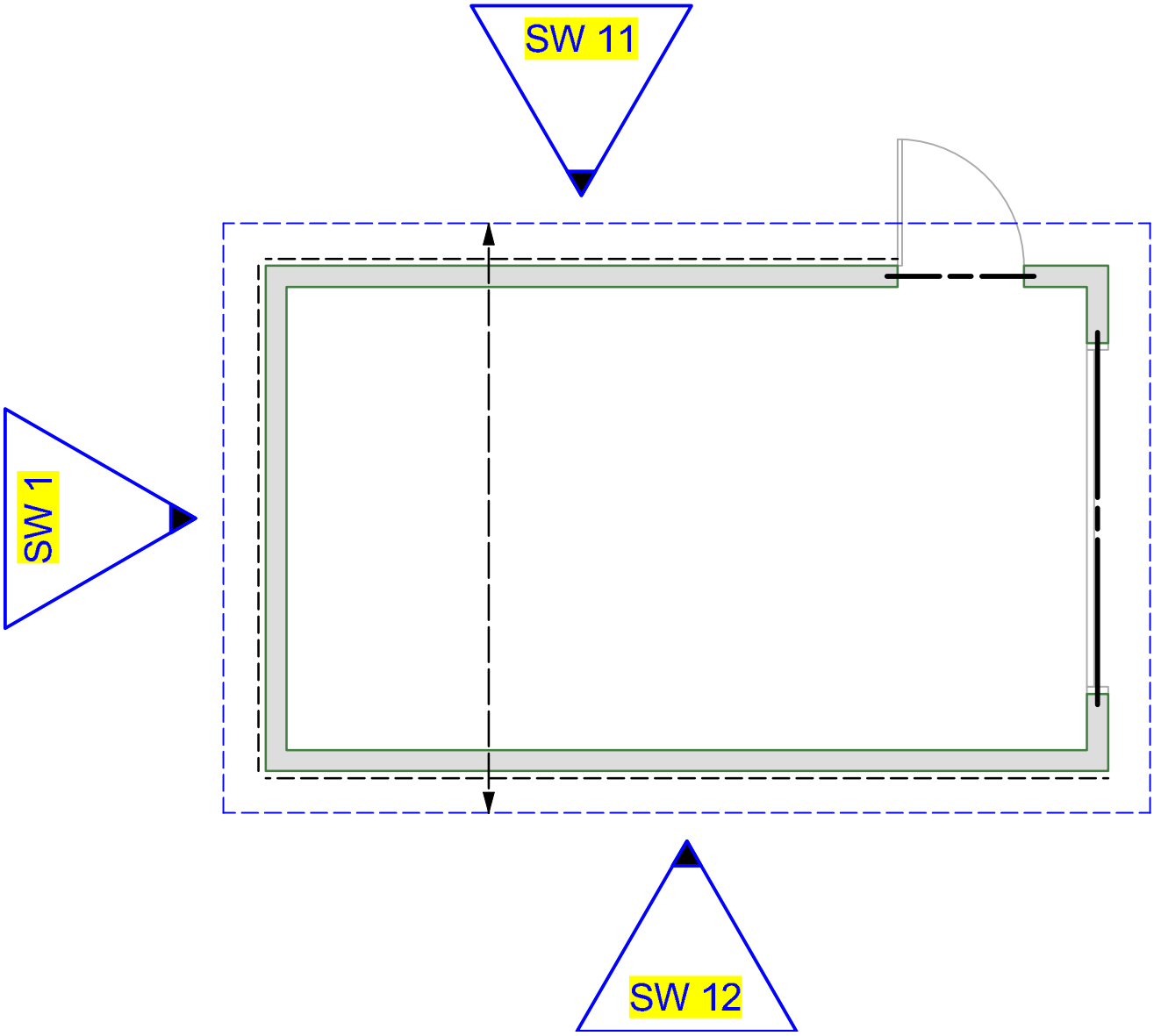

Ashley&Vance ENGINEERING, INC

Job: 221743 - Prospect Lake Pumphouse - EcoResource Solutions

ASD Lateral Force Analysis 2015 IBC

Building Forces Level	Seis. (psf)	All H. Wind (plf)
Roof	1.0	210.3
Totals:	1.0	210.3

TYPE	Materials	Sides	EQ / Wind*	
6	7/16" OSB 8d @ 6"	1	350 / 490	plf
4	3/8" cdx 8d @ 4"	1	320 / 448	plf
3	3/8" cdx 8d @ 3"	1	410 / 574	plf
2	3/8" cdx 8d @ 2"	1	530 / 742	plf
44	3/8" cdx 8d @ 4"	2	640 / 896	plf
33	3/8" cdx 8d @ 3"	2	820 / 1148	plf

Total Force = Trib Shear + Add'l Shear

Total Shear = Total Force / Wall Length

**Per 2015 SDPWS Table 4.3A, shearwall capacities have been increased by 40% when walls are governed by wind loading.*

Wall ID	Wall Len (ft)	Wall Ht. (ft)	% of Line Load	Seismic Trib Len (ft)	Seismic Trib Width (ft)	Wind Trib (ft)	Shear Seis (lbs)	Shear Wind (lbs)	Add'l Seis (lbs)	Add'l Wind (lbs)	Wall H/L Ratio	Gov. Force (lbs)	Wall Shear (plf)	Gov Case	*Type*
S-2.2 Roof Framing Plan															
NS															
SW 1	*12.00*	*9.00*	100%	14.0	22.0	22.0	323	4626	0	0	3/4:1	4626	**386**	Wind	***6***
EW															
SW 11	*15.00*	*9.00*	100%	22.0	7.0	7.0	162	1472	0	0	3/5:1	1472	**98**	Wind	***6***
SW 12	*20.00*	*9.00*	100%	22.0	7.0	7.0	162	1472	0	0	4/9:1	1472	**74**	Wind	***6***

Ashley & Vance ENGINEERING, INC

Job: 221743 - Prospect Lake Pumphouse ASD Lateral Force Analysis 2015 IBC

REDUNDANCY FACTOR CALCULATION

Is the structure regular in plan at all levels? YES
Is the structure light framed construction? YES
SDC B

> 35% Base Shear?	Wall ID	ASCE 12.3.4.2 a Wall Capacity (lbs)	H/L	% Capacity	ρ at Level	ρ per wall
YES	**Roof Framing Plan**					
	NS	**4200**	(Total Story Strength)		**1.3**	
	SW 1	4200	0.75	N/A		**1.3**
	EW	**12250**	Story Strength)		**1.3**	
	SW 11	5250	0.60	N/A		**1.3**
	SW 12	7000	0.45	N/A		**1.3**

Ashley&Vance
ENGINEERING, INC

Job: 221743 - Prospect Lake Pumphouse ASD Lateral Force Analysis 2015 IBC

Description of Variables:	Mot	Overturning Moment
	Mr Left	Resisting Moment about the Left side of the wall
	Mr Right	Resisting Moment about the Right side of the wall
	HD Left	Hold down force on the left side of the wall
	HD Right	Hold down force on the right side of the wall

Seismic: $HD = (\rho 0.7M_{OT} - (0.6-0.14*S_{DS})M_R) / L$ (ASCE 12.4.2.3)

Wind: $HD = (0.6MOT - 0.6M_R) / L$ (ASCE 2.4.1)

Wall ID	M_{OT} (lb-ft)	$M_{R\ Left}$ (lb-ft)	$M_{R\ Right}$ (lb-ft)	HD Left (lb)	HD Right (lb)	Gov.	Use Left	Use Right
S-2.2 Roof Framing Plan								
NS								
SW 1	49537	8280	8280	2153	2153	Wind	HDU4	HDU4
EW								
SW 11	15762	13050	13050	112	112	Wind	OK	OK
SW 12	15762	23400	23400	-235	-235	Wind	OK	OK

Ashley&Vance ENGINEERING, INC.

Prospect Lake Pumphouse (Struct)

Prospect Lake Drive,
Colorado Springs, CO 80910

Job No.: **221743**

Foundation Layout

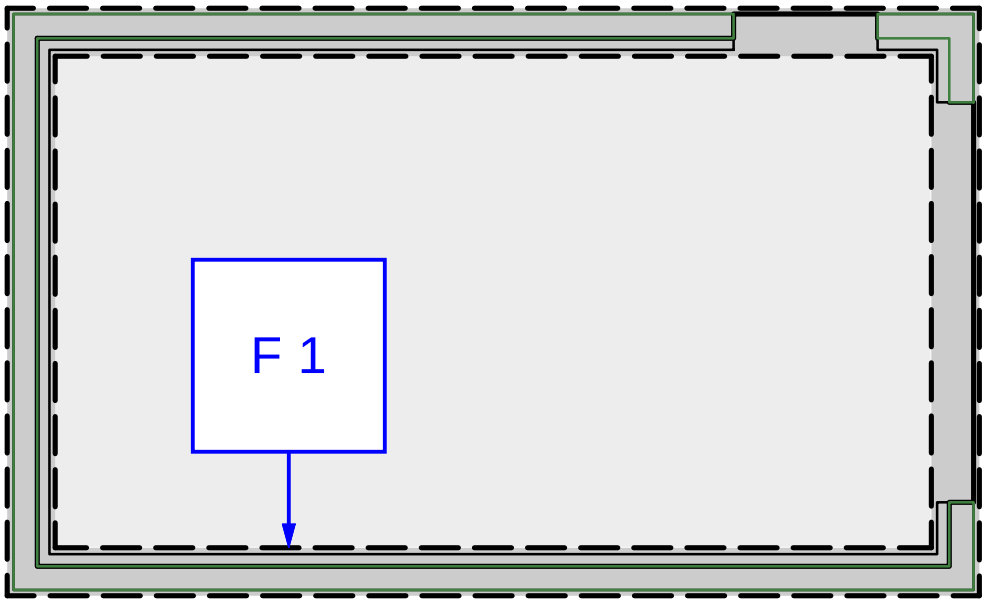

Ashley&Vance
ENGINEERING, INC

Job: 221743 - Prospect Lake Pumphouse (Struct) - EcoResource Solutions

Continuous Footing Width Calculation:

q_{all} = 1,500 psf Allowable Bearing Pressure (per Table 1806.2)

+ 33% Increase for Transient Loading --> q_{all} = 1,995 psf

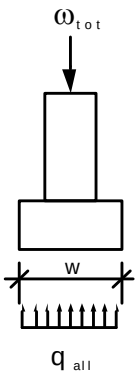

Description of Variables:		DL	LR	S	-
1r = 1 ft of roof trib	Roof	15	20	37.8	psf
2f = 2 ft of floor trib	Floor	0	0	0	psf
3g = 3 ft of garage trib	Garage	0	0	0	psf
4d = 4 ft of deck trib	Deck	0	0	0	psf
5w = 5 ft of wall or self wt.	Wall	34	0	0	psf

* Allowable Bearing Capacity Based on ASD Load Combinations (ASCE 7-16 2.4.1)

FTG	Tributary		Distributed Loads (plf)						
F1			Wdl	Wlr	Ws				
	6.0	r	90	120	226.8				
	0.0	f	0	0	0				
	0.0	g	0	0	0				
	0.0	d	0	0	0				
	11.5	w	391	0	0				
	Totals:		481	120	226.8				

Worst Case Load Combinations (per ASCE 7-16 2.4)

ASD Static: Case 3: D + S

Bearing Design Checks

Static Loading:

Check Continuous Footing: **12"** Width

ω_{tot} **708 plf** q_{bear} 708 psf

q_{allow} 1500 psf

q_{bear}/q_{allow} **0.47 OK**

12" Wide Footing w/ #4 @ 24"oc OK

MECHANICAL SYMBOLS

HVAC EQUIP. AND DUCTWORK

NOTE: ALL DUCT DIMENSIONS SHOWN ON DRAWINGS ARE INSIDE DIMENSIONS.

- INSULATED FLEXIBLE DUCT (MAXIMUM 5'-0" LONG)
- BRANCH DUCT WITH CONICAL FITTING AND MANUAL VCD
- D-1 10x10 250 — TYPE, NECK SIZE, CFM AT SUPPLY DIFFUSER OR REGISTER
- G-1 24/24 — TYPE, SIZE AT EXHAUST OR RETURN GRILLE
- MANUAL VOLUME CONTROL DAMPER (VCD)
- SQUARE TO ROUND TRANSITION
- 12x6 — RECTANGULAR DUCT (1ST FIGURE = SIDE SHOWN)
- 12"Ø — ROUND DUCT (1ST FIGURE = DIAMETER)
- T — THERMOSTAT

MISCELLANEOUS

- CONNECTION POINT OF NEW WORK TO EXISTING
- 1 / M1 — DETAIL REFERENCE: UPPER NUMBER INDICATES DETAIL NUMBER, LOWER NUMBER INDICATES SHEET NUMBER
- 1 — NOTE REFERENCE SYMBOL

STANDARD MOUNTING HEIGHTS

MECHANICAL

THERMOSTAT	48" (ADA) / 60"
CONTROLS	48" (ADA) / 60"

ABBREVIATIONS

AFF	ABOVE FINISHED FLOOR
AFG	ABOVE FINISHED GRADE
AHU	AIR HANDLING UNIT
BD	BACKDRAFT DAMPER, BLOWDOWN
BFF	BELOW FINISHED FLOOR
BOD	BOTTOM OF DUCT
BOS	BOTTOM OF STRUCTURE
BTU	BRITISH THERMAL UNIT
CA	COMPRESSED AIR
CFM	CUBIC FEET PER MINUTE
CO	CLEANOUT
D	DEMOLISH
DN	DOWN
E	EXISTING
EA	EXHAUST AIR
EAT	ENTERING AIR TEMPERATURE
EC	ELECTRICAL CONTRACTOR
EDB	ENTERING DRY BULB
EF	EXHAUST FAN
EPO	EMERGENCY POWER OFF
ETR	EXISTING TO REMAIN
EWB	ENTERING WET BULB
FACP	FIRE ALARM CONTROL PANEL
FCO	FLOOR CLEANOUT
FD	FIRE DAMPER, FLOOR DRAIN
FF	FINISHED FLOOR
FSD	FIRE/SMOKE DAMPER
GCO	GRADE CLEANOUT
GPM	GALLONS PER MINUTE
HB	HOSE BIBB
HOA	HANDS OFF AUTOMATIC
HTG	HEATING
IE	INVERT ELEVATION
IN WC	INCHES OF WATER COLUMN
LAT	LEAVING AIR TEMPERATURE
LDB	LEAVING DRY BULB
LP	LOW PRESSURE
LRA	LOCKED ROTOR AMPS
LWB	LEAVING WET BULB
LWT	LEAVING WATER TEMPERATURE
MBH	1000 BTU PER HOUR
MC	MECHANICAL CONTRACTOR
MCA	MINIMUM CIRCUIT AMPACITY
MD	MOTORIZED DAMPER
MFR	MANUFACTURER
MTD	MOUNTED
NA	NOT APPLICABLE
NC	NOISE CRITERIA
NIC	NOT IN CONTRACT
NO, NC	NORMALLY OPEN, NORMALLY CLOSED
OA	OUTSIDE AIR
PHØ	PHASE
QTY	QUANTITY
RA	RETURN AIR
RH	RELATIVE HUMIDITY
RL	RELOCATE
RPM	REVOLUTIONS PER MINUTE
SA	SUPPLY AIR
SD	SMOKE DETECTOR
SF	SQUARE FEET
SP	STATIC PRESSURE
TA	TRANSFER AIR
TSTAT	THERMOSTAT
UC	UNDERCUT
UH	UNIT HEATER
UL	UNDERWRITERS LABORATORIES, INC.
VCD	VOLUME CONTROL DAMPER
W, W/O	WITH, WITHOUT
WB	WET BULB
WCO	WALL CLEANOUT
WC	WATER COLUMN

GENERAL NOTES

1. REFER TO PLANS FOR ADDITIONAL NOTES.
2. THE PLANS ARE, TO A GREAT EXTENT, DIAGRAMMATIC IN NATURE. DRAWING SCALES SHOULD BE VERIFIED FROM DIMENSIONS ON ARCH. PLANS. THE INFORMATION PRESENTED IS AS EXACT AS COULD BE SECURED. THE CONTRACTOR SHALL OBTAIN EXACT LOCATION, MEASUREMENTS LEVELS, ETC. AT THE SITE AND SHALL SATISFACTORILY ADAPT THE WORK TO THE ACTUAL CONDITIONS AT THE PROJECT SITE.
3. CONTRACTOR SHALL VISIT THE JOB SITE PRIOR TO SUBMITTING A BID TO COVER THE CONDITIONS AT THE SITE, INFORMING THEMSELVES OF ALL DETAILS.
4. ALL WORK SHALL COMPLY WITH ALL APPLICABLE FEDERAL, STATE, AND LOCAL CODES, LAWS, ACTS, AND ORDINANCES, AND ALL AUTHORITIES HAVING JURISDICTION.
5. THE COMPLETED INSTALLATION SHALL BE IN ACCORDANCE WITH ALL ENGINEERING REQUIREMENTS, THE OWNER'S DESIGN CRITERIA, UTILITY COMPANY REQUIREMENTS, APPLICABLE INDUSTRY STANDARDS OF GOOD PRACTICE AND SAFETY, AND THE MANUFACTURER'S STRICTEST RECOMMENDATIONS FOR EQUIPMENT,PRODUCT APPLICATION, AND INSTALLATION.
6. MANUFACTURERS' NAMES ON WHICH THIS SPECIFICATION IS BASED INDICATE THE MINIMUM QUALITY OF PRODUCT REQUIRED BY ARCHITECT/ENGINEER. SUBSTITUTIONS MAY BE MADE TO THOSE SPECIFIED IF DEEMED EQUIVALENT BY THE ARCHITECT/ENGINEER DURING SUBMITTAL REVIEW.
7. RECORD DRAWINGS - PREPARE AND SUBMIT TO THE OWNER RECORD DRAWINGS INDICATING THE EXACT LOCATION OF ALL EQUIPMENT INCLUDING THE EQUIPMENT'S "AS INSTALLED" SIZE(S), MANUFACTURER, MODEL NUMBERS, AND PERFORMANCE RATINGS.
8. SUPPORTS - EQUIPMENT, PIPING, DUCTWORK, OR ANY OTHER ACCESSORY SHALL NOT BE SUPPORTED FROM OTHER PIPING, DUCTWORK, METAL ROOF DECK, LATERAL BRACING BRIDGING, OR CONDUIT. ITEMS SHALL ONLY BE SUPPORTED FROM BUILDING STRUCTURE.
9. COORDINATE EXACT LOCATION OF ALL DUCTWORK, AIR TERMINAL UNITS, PIPING, ETC., WITH STRUCTURAL, ARCHITECTURAL, ELECTRICAL, AND OTHER MECHANICAL SYSTEMS.
10. WHERE MOUNTING HEIGHTS ARE NOT DETAILED OR DIMENSIONED, INSTALL MECHANICAL SERVICES AND OVERHEAD EQUIPMENT TO PROVIDE THE MAXIMUM HEADROOM POSSIBLE.
11. ALL DUCTWORK, PIPING, AND TEMPERATURE CONTROL CONDUIT TO VIBRATING EQUIPMENT SHALL HAVE FLEXIBLE CONNECTORS.
12. IF ASBESTOS IS ENCOUNTERED OR SUSPECTED, HALT WORK IMMEDIATELY IN THESE AREAS AND NOTIFY CONTRACTING OFFICERS REPRESENTATIVE BEFORE PROCEEDING. DO NOT DAMAGE OR DISTURB SUSPECTED ASBESTOS CONTAINING MATERIAL. COORDINATE ALL REMOVAL WITH THE CONSTRUCTION MANAGER AND OWNER.
13. COORDINATE ALL ROOF AND CHASE PENETRATIONS WITH STRUCTURAL DRAWINGS AND ROOF INSTALLER.
14. CONTRACTOR TO BE RESPONSIBLE FOR PROTECTION OF THEIR EMPLOYEES FROM ANY LEAD DUST THAT MAY BE ENCOUNTERED.
15. THE LOCATION OF UNDERGROUND UTILITIES IS SHOWN IN AN APPROXIMATE WAY ONLY. THE CONTRACTOR SHALL DETERMINE THE EXACT LOCATION OF ALL EXISTING UTILITIES BEFORE COMMENCING WORK.
16. ALL TESTS SHALL BE COMPLETED BEFORE ANY MECHANICAL EQUIPMENT OR PIPING INSULATION IS APPLIED.
17. CONTRACTOR TO COORDINATE DUCTWORK WITH FIRE RATED WALLS AND FLOORS SHOWN ON ARCHITECTURAL DRAWINGS, MAINTAINING NECESSARY RATING OF WALLS. CONTRACTOR IS RESPONSIBLE FOR ALL CONNECTIONS TO SMOKE-FIRE DAMPERS.
18. ALL DUCTWORK DIMENSIONS, AS SHOWN ON THE DRAWINGS, ARE INTERNAL CLEAR DIMENSIONS AND DUCT SIZE SHALL BE INCREASED TO COMPENSATE FOR DUCT LINING THICKNESS.
19. MECHANICAL CONTRACTOR IS COMPLETELY RESPONSIBLE FOR PROVIDING ALL PRESSURE AND/OR TEMPERATURE TAPS IN PIPING AS REQUIRED FOR PROPER BALANCING OF ALL SYSTEMS.
20. BEFORE INSTALLATION, EQUIPMENT CONTRACTOR SHALL VERIFY THAT COILS CAN BE REMOVED WITHOUT INTERFERENCE. CONTRACTOR SHALL PROVIDE ADEQUATE ACCESS AND COIL REMOVAL SPACE FOR ALL EQUIPMENT.
21. ACCESS PANELS ARE REQUIRED (MIN. 18"X18") FOR ACCESS TO EVERY VALVE, DAMPER, AIR TERMINAL UNIT, AND CONTROL SENSOR IF NOT OTHERWISE ACCESSIBLE. ACCESS PANEL SHALL BE APPROVED BY ARCHITECT/ENGINEER.
22. SMOKE DETECTORS SHALL BE FURNISHED AND WIRED BY THE ELECTRICAL CONTRACTOR. THE MECHANICAL CONTRACTOR SHALL BE RESPONSIBLE FOR MOUNTING THE SMOKE DETECTOR IN DUCTWORK AS SHOWN ON THE ELECTRICAL DRAWINGS AND IN ACCORDANCE WITH MANUFACTURER'S PRINTED INSTRUCTIONS.

SCOPE OF WORK

MECHANICAL

- HEATER AND VENTILATION FOR PARK AERATION SHED.

CODE SUMMARY

REGIONAL BUILDING CODE	2017 RBC
BUILDING	2015 IBC
FIRE	2015 IFC
MECHANICAL	2015 IMC
PLUMBING	2018 IPC
ENERGY CONSERVATION	2015 IECC
ELECTRICAL	2020 NEC

Add note: Provide (1) copy of test and balance report to mechanical inspector at time of heating final inspection.

NATURAL VENTILATION CALCULATIONS

NATURAL VENTILATION PER IMC 402

REQUIRED OPERABLE AREA = 210 SQFT x 0.04 = 8.4 SQFT

OPERABLE AREA; GARAGE DOOR = 64 SQ FT

OPERABLE AREA; MAN DOOR = 24 SQ FT

NET OPERABLE AREA = 88 SQ FT

Ramirez, Johnson, & Associates
3301 Lawrence St. Ste 2
Denver, CO 80205
P: 720.598.0774

JUST ARCHITECTURE & DESIGN
PHONE: (720) 323-1493
email: kyle@justarchitectureanddesign.com
9815 Westbury Ct. Highlands Ranch, CO 80129

ANDREW T. ACHTERMANN REGISTERED 52554 09/15/2023 PROFESSIONAL ENGINEER STATE OF COLORADO

STAMP

PROSPECT LAKE EQUIPMENT BUILDING

PROSPECT LAKE, COLORADO SPRINGS, CO

#	DATE	ISSUE
1	2-20-23	1ST PERMIT
2	9-15-23	2ND PERMIT
3		
4		
5		
6		

PROJECT NUMBER: 23-001
DRAWN BY: ATA
CHECKED BY: SKZ

ALL INSTRUMENTS OF SERVICE, ALL DESIGNS, IDEAS AND INFORMATION SHOWN ON THESE DRAWINGS ARE AND SHALL REMAIN THE PROPERTY OF JUST ARCHITECTURE & DESIGN, LTD. NO PART THEREOF SHALL BE COPIED, DISCLOSED TO OTHERS, OR USED IN CONNECTION WITH ANY PROJECT OTHER THAN THE SPECIFIC PROJECT FOR WHICH THEY HAVE BEEN PREPARED WITHOUT THE WRITTEN CONSENT OF JUST ARCHITECTURE & DESIGN, LTD. VISUAL CONTACT WITH THESE DRAWINGS SHALL CONSTITUTE CONCLUSIVE EVIDENCE OF ACCEPTANCE OF THESE RESTRICTIONS.

MECHANICAL COVERSHEET

M001

Released for Permit
09/22/2023 11:43 AM
REGIONAL Building Department
JURISDIC
MECHANICAL

MECHANICAL SPECIFICATIONS

A. GENERAL:

1. THE CONTRACTOR SHALL COORDINATE AND COOPERATE WITH ARCHITECT AND OWNER AT ALL TIMES FOR ALL NEW-TO-EXISTING CONNECTIONS, SYSTEM SHUTDOWNS, RESTART-UP, AND FLUSHING AND FILLING OF BOTH NEW AFFECTED SYSTEMS.
2. REPORT ANY DAMAGED EQUIPMENT OR SYSTEMS TO THE OWNER PRIOR TO ANY WORK.
3. INSTALL ALL EQUIPMENT AND MATERIALS IN SUCH A MANNER AS TO PROVIDE REQUIRED ACCESS FOR SERVICING AND MAINTENANCE. ALLOW AMPLE SPACE FOR REMOVAL OF ALL PARTS THAT REQUIRE REPLACEMENT OR SERVICING.
4. FURNISH HINGED STEEL ACCESS DOORS WITH CONCEALED LATCH, WHETHER SHOWN ON DRAWINGS OR NOT, WHERE REQUIRED FOR ACCESS TO ALL CONCEALED VALVES, SHOCK ABSORBERS, MOTORS, FANS, BALANCING COCKS, AND OTHER OPERATING DEVICES REQUIRING ADJUSTMENT OR SERVICING. ACCESS DOORS IN FIRE-RATED WALLS AND CEILINGS SHALL HAVE EQUIVALENT UL LABEL AND FIRE RATING.
5. IT IS THE INTENTION OF THESE SPECIFICATIONS AND DRAWINGS TO CALL FOR FINISHED WORK, TESTED AND READY FOR OPERATION. WHEREVER THE WORD "PROVIDE" IS USED, IT SHALL MEAN "FURNISH AND INSTALL COMPLETE AND READY FOR USE."
6. SECURE AND PAY FOR ALL PERMITS, TAP FEES, TAXES, ROYALTIES, LICENSES, AND INSPECTIONS IN CONNECTION WITH THE WORK SPECIFIED UNDER DIVISION 23.
7. ALL WORK SHALL COMPLY WITH ALL APPLICABLE CODES AND REGULATIONS.
8. DRAWINGS ARE DIAGRAMMATIC IN CHARACTER AND DO NOT NECESSARILY INDICATE EVERY REQUIRED OFFSET, VALVE, FITTING, ETC.
9. DRAWINGS SHALL NOT BE SCALED FOR ROUGH-IN MEASUREMENTS OR USED AS SHOP DRAWINGS. ALL DIMENSIONS SHALL BE VERIFIED IN FIELD.
10. ALL NEW, RELOCATED AND EXISTING MATERIALS, IN CEILING PLENUMS SHALL BE CLASS 1 RATED, NOT EXCEEDING RATING OF 25 FLAME SPREAD AND 50 SMOKE DEVELOPED. REMOVE AND REPLACE ALL EXISTING MATERIALS NOT IN COMPLIANCE.
11. BEFORE ANY EQUIPMENT IS ORDERED AND/OR INSTALLED, DETERMINE THAT SAID EQUIPMENT WILL PROPERLY FIT WITHIN THE SPACE ALLOCATED; THAT REQUIRED PIPING GRADES CAN BE MAINTAINED; AND THAT DUCTWORK CAN BE RUN AS INTENDED.
12. COORDINATE THE INSTALLATION OF MECHANICAL MATERIALS AND EQUIPMENT ABOVE AND BELOW CEILINGS, LIGHT FIXTURES, AND OTHER BUILDING COMPONENTS. ALL COMPONENTS SHALL BE LOCATED AS TIGHT TO STRUCTURE AS POSSIBLE. COORDINATE CEILING CAVITY SPACE CAREFULLY WITH ALL TRADES.
13. ALL MATERIALS AND EQUIPMENT SHALL BE NEW, FREE OF DEFECTS, AND INSTALLED IN ACCORDANCE WITH MANUFACTURER'S CURRENT PUBLISHED RECOMMENDATIONS.
14. CONTRACTOR SHALL PREPARE AND SUBMIT TO THE OWNER ELECTRONIC (PDF) OF ALL SHOP DRAWINGS AND DESCRIPTIVE EQUIPMENT DATA/SUBMITTALS REQUIRED FOR THE PROJECT. THE CONTRACTOR SHALL IDENTIFY ANY "LONG LEAD TIME" ITEMS WHICH MAY IMPACT THE OVERALL PROJECT SCHEDULE. ALL BIDS SHALL INCLUDE COSTS ASSOCIATED WITH THE PURCHASE AND DELIVERY OF EQUIPMENT TO MEET THE PROJECT SCHEDULE.
15. QUIET OPERATION AND VIBRATION; MECHANICAL EQUIPMENT PROVIDED UNDER THIS CONTRACT SHALL OPERATE UNDER ALL LOAD CONDITIONS WITHOUT NOISE OR VIBRATION.
16. KEEP A COMPLETE SET OF RECORD DOCUMENT PRINTS IN CUSTODY DURING ENTIRE PERIOD OF CONSTRUCTION AT THE CONSTRUCTION SITE. AT THE COMPLETION OF THE PROJECT, TURN THESE DRAWINGS OVER TO THE GENERAL CONTRACTOR FOR HIS SUBMISSION TO THE ARCHITECT.
17. THE CONTRACTOR FOR THIS WORK SHALL EXAMINE THE DRAWINGS AND SPECIFICATIONS FOR OTHER PARTS OF THE WORK, AND IF HEADROOM OR SPACE CONDITIONS APPEAR INADEQUATE OR IF ANY DISCREPANCIES OCCUR BETWEEN THE PLANS FOR HIS WORK AND THE PLANS FOR THE WORK OF OTHERS, HE SHALL REPORT SUCH DISCREPANCIES TO THE ARCHITECT/ENGINEER AND SHALL OBTAIN WRITTEN INSTRUCTIONS FOR ANY CHANGES NECESSARY TO ACCOMMODATE HIS WORK WITH THE WORK OF OTHERS. ANY CHANGES IN THE WORK COVERED BY THIS SPECIFICATION MADE NECESSARY BY THE FAILURE OR NEGLECT OF THE CONTRACTOR TO REPORT SUCH DISCREPANCIES SHALL BE MADE BY AND AT THE EXPENSE OF THIS CONTRACTOR.
18. OPERATING AND MAINTENANCE DATA; THE CONTRACTOR SHALL PREPARE AN OPERATING AND MAINTENANCE MANUAL COVERING ALL SYSTEMS AND EQUIPMENT INSTALLED UNDER THIS DIVISION. SUBMIT AN OUTLINE OF A PREVENTATIVE MAINTENANCE PROGRAM FOR EACH SYSTEM. CONTRACTOR SHALL PROPERLY LUBRICATE ALL MECHANICAL PIECES OF EQUIPMENT, WHICH HE HAS PROVIDED BEFORE TURNING THE BUILDING OVER TO THE OWNER.
19. WARRANTIES:
    a. PROVIDE COMPLETE WARRANTY INFORMATION FOR EACH ITEM, INCLUDING, NAME OF PRODUCT OR EQUIPMENT; DATE OF BEGINNING OF WARRANTY OR BOND; DURATION OF WARRANTY OR BOND; AND NAMES, ADDRESSES, AND TELEPHONE NUMBERS OF MANUFACTURING/SERVICING PERSONNEL, AS WELL AS, PROCEDURES FOR FILING A CLAIM AND OBTAINING WARRANTY SERVICES.
    b. THE CONTRACTOR SHALL WARRANT ALL MATERIALS, WORKMANSHIP AND THE SUCCESSFUL OPERATION OF ALL EQUIPMENT AS IDENTIFIED IN THE GENERAL CONDITIONS, OR DIVISION 1.
20. ANY FILTERS USED DURING CONSTRUCTION SHALL BE REPLACED WITH NEW FILTERS DURING FINAL CLEANUP.
21. RESPONSIBILITY OF CONTRACTOR; THE CONTRACTOR IS RESPONSIBLE FOR THE COMPLETE AND SATISFACTORY INSTALLATION OF THE WORK IN ACCORDANCE WITH THE TRUE INTENT OF THE DRAWINGS AND SPECIFICATIONS. HE SHALL PROVIDE, WITHOUT EXTRA CHARGE, ALL INCIDENTAL ITEMS REQUIRED, AS A PART OF HIS WORK. THE INSTALLATION SHALL BE SO MADE THAT ITS SEVERAL COMPONENT PARTS WILL FUNCTION TOGETHER AS A WORKABLE SYSTEM AND SHALL BE LEFT WITH ALL PARTS ADJUSTED AND IN WORKING ORDER.

B. MECHANICAL/ELECTRICAL REQUIREMENTS FOR MECHANICAL EQUIPMENT:

1. CONTRACTOR SHALL REVIEW ELECTRICAL POWER REQUIREMENTS FOR MECHANICAL EQUIPMENT THAT ARE SCHEDULED ON THE ELECTRICAL DRAWINGS PRIOR TO ORDERING EQUIPMENT. DO NOT PURCHASE MOTORS OR ELECTRICAL EQUIPMENT UNTIL POWER CHARACTERISTICS AVAILABLE AT BUILDING SITE LOCATION HAVE BEEN CONFIRMED BY CONTRACTOR.
2. PROVIDE SAFETY DISCONNECT SWITCHES FOR ALL MECHANICAL EQUIPMENT, UNLESS SPECIFICALLY SHOWN ON DIVISION 16 REQUIREMENTS.
3. FURNISH COMBINATION TYPE FULL NEMA RATED STARTERS WITH FUSED DISCONNECT SWITCH FOR ALL MOTORS PROVIDED.
4. ELECTRICAL WIRING IN CONNECTION WITH THE AUTOMATIC TEMPERATURE CONTROL SYSTEM, INCLUDING INTERLOCK WIRING, WHERE SHOWN ON THE DIVISION 16 DRAWINGS, SHALL BE PERFORMED BY THE ELECTRICAL CONTRACTOR. ALL OTHER WIRING, INCLUDING 120V REQUIRED FOR PROPER OPERATION OF THE AUTOMATIC TEMPERATURE CONTROL SYSTEM, SHALL BE PERFORMED BY THE MECHANICAL CONTRACTOR.

C. MECHANICAL IDENTIFICATION:

1. LABEL ALL DUCT ACCESS DOORS, PIPING, EQUIPMENT, AND THERMOSTATS. PIPING AND EQUIPMENT SHALL BE IDENTIFIED WITH 2" HIGH TEXT LABELS AND 6" FLOW ARROWS.

D. VIBRATION CONTROL:

1. ALL MECHANICAL EQUIPMENT, PIPING AND DUCTWORK AS NOTED OR IN THE SPECIFICATION, SHALL BE MOUNTED ON VIBRATION ISOLATORS TO PREVENT THE TRANSMISSION OF VIBRATION AND MECHANICALLY TRANSMITTED SOUND TO THE BUILDING STRUCTURE. VIBRATION ISOLATORS SHALL BE SELECTED IN ACCORDANCE WITH MANUFACTURER'S RECOMMENDATIONS AND THE WEIGHT DISTRIBUTION, SO AS TO PRODUCE REASONABLY UNIFORM DEFLECTION.

E. WATER DISTRIBUTION SYSTEM (NOT POTABLE WATER ONLY):

1. INSTALL PRESSURE REDUCING VALVES TO LIMIT MAXIMUM PRESSURE AT PLUMBING FIXTURES TO 65 PSIG.

F. METAL DUCTWORK:

1. NEW RECTANGULAR SUPPLY DUCTWORK SHALL BE GALVANIZED SHEET METAL, WRAPPED WITH FIBERGLASS INSULATION.
2. ALL DUCT DIMENSIONS ARE INSIDE CLEAR DIMENSIONS IN INCHES.
3. FABRICATE DUCTWORK OF GAUGES AND REINFORCEMENT COMPLYING WITH SMACNA “HVAC DUCT CONSTRUCTION STANDARDS”. MEDIUM PRESSURE DUCT, PRESSURE CLASS 4" W.G. POSITIVE OR NEGATIVE, SEAL CLASS A. LOW PRESSURE DUCT, DOWNSTREAM OF FAN COIL UNITS - PRESSURE CLASS 2" W.G. POSITIVE OR NEGATIVE, SEAL CLASS B.
4. USE MINIMUM 26 GA. WHERE DUCTS ARE WITHIN CORRIDORS.
5. SMACNA STANDARDS: COMPLY WITH SMACNA “HVAC DUCT CONSTRUCTION STANDARDS, METAL AND FLEXIBLE” FOR FABRICATION AND INSTALLATION OF METAL DUCTWORK. COMPLY WITH SMACNA “HVAC AIR DUCT LEAKAGE TEST MANUAL” FOR TESTING OF DUCT SYSTEMS.
6. CONNECTIONS TO EXHAUST GRILLES SHALL BE MADE WITH RIGID DUCTWORK ONLY.
7. SEAL ALL DUCTWORK WITH NON-HARDENING, NON-MIGRATING MASTIC OR LIQUID ELASTIC SEALANT, OF TYPE APPLICABLE FOR FABRICATION/INSTALLATION DETAIL, AS COMPOUNDED AND RECOMMENDED BY MANUFACTURER, SPECIFICALLY FOR SEALING JOINTS AND SEAMS IN DUCTWORK.
8. DUCT TAKEOFF FITTINGS: PROVIDE SPIN-IN FITTINGS AT FLEXIBLE OR ROUND SHEET METAL DUCT TAKEOFFS TO AIR DEVICES. FITTINGS DOWNSTREAM OF AIR TERMINALS SHALL INCLUDE BUTTERFLY TYPE MANUAL VOLUME DAMPER WITH END BEARINGS, REGULATOR, AND LOCKING DEVICE.
9. PROVIDE DUCT HANGERS IN ACCORDANCE WITH SMACNA HVAC DUCT MANUALS.

G. AIR OUTLETS AND INLETS:

10. CEILING COMPATIBILITY: PROVIDE DIFFUSERS WITH BORDER STYLES THAT ARE COMPATIBLE WITH ADJACENT CEILING SYSTEMS, AND THAT ARE SPECIFICALLY MANUFACTURED TO FIT INTO CEILING MODULE WITH ACCURATE FIT AND ADEQUATE SUPPORT. REFER TO ARCHITECTURAL DRAWINGS AND SPECIFICATIONS FOR TYPES OF CEILING SYSTEMS, WHICH WILL CONTAIN EACH TYPE OF CEILING AIR DIFFUSER.

H. CONTROLS:

1. TEMPERATURE CONTROLS CONTRACTOR SHALL PROVIDE A COMPLETE NEW CONTROL SYSTEM USING NEW CONTROL DEVICES AS REQUIRED FOR THE MECHANICAL SYSTEMS TO OPERATE PROPERLY.
2. THE CONTRACTOR WILL BE RESPONSIBLE FOR ALL INSTALLATION, PROGRAMMING, COMMISSIONING, TESTING AND PERFORMANCE VERIFICATION.
3. THE CONTRACTOR WILL BE RESPONSIBLE FOR PROVIDING ALL DEVICES REQUIRED FOR A COMPLETE OPERATING CONTROL SYSTEM.
4. PROVIDE 120V WIRING AS REQUIRED FOR THE TEMPERATURE CONTROL SYSTEMS, UNLESS SPECIFICALLY INDICATED ON ELECTRICAL DRAWINGS.
5. ALL THERMOSTAT CONTROLS SHALL HAVE A 5°F DEADBAND.

TESTING, ADJUSTING AND BALANCING:

A. GENERAL:

1. THE CONTRACTOR SHALL TEST, ADJUST AND BALANCE ALL AIR SIDE SYSTEMS AND EQUIPMENT THROUGHOUT THE BUILDING, INCLUDING UNMODIFIED SYSTEMS AND EQUIPMENT; SUPPLY/RETURN AIR SYSTEMS, AIR TERMINALS, DIFFUSERS AND GRILLES, GENERAL EXHAUST/SUPPLY FANS, AIR HANDLING UNITS, TERMINAL UNITS, ETC.

B. QUALIFICATIONS OF CONTRACTOR:

1. THE MECHANICAL CONTRACTOR SHALL PROCURE THE SERVICES OF AN INDEPENDENT TESTING AND BALANCING AGENCY (NOT ENGAGED IN ENGINEERING DESIGN AND IS NOT A DIVISION OF A MECHANICAL CONTRACTING) ENTITY, SPECIALIZING IN THE TESTING, ADJUSTING AND BALANCING OF ENVIRONMENTAL SYSTEMS TO PERFORM THE ABOVE-MENTIONED WORK. WORK SHALL BE PERFORMED BY QUALIFIED TECHNICIANS WHO ARE CURRENTLY CERTIFIED BY THE TESTING, ADJUSTING AND BALANCING BUREAU (TABB), THE NATIONAL ENVIRONMENTAL BALANCING BUREAU (NEBB), OR THE ASSOCIATED AIR BALANCE COUNCIL (AABC).

C. APPROVAL OF CONTRACTOR:

1. ANY TESTING AND BALANCING FIRM DESIRING TO OFFER THEIR SERVICES FOR THIS WORK SHALL SUBMIT THEIR QUALIFICATIONS TO THE ENGINEER PRIOR TO BEGINNING WORK.

D. TESTING PROCEDURES:

1. TESTING AND BALANCING SHALL NOT BEGIN UNTIL THE SYSTEM HAS BEEN COMPLETED AND IS IN FULL WORKING ORDER.
2. BEFORE ANY AIR BALANCE WORK IS DONE, CHECK THE SYSTEM FOR DUCT LEAKAGE; ASSURE THAT NEW FILTERS ARE INSTALLED; CHECK FOR CORRECT FAN ROTATION; FOR EQUIPMENT VIBRATION; AND AUTOMATIC DAMPERS FOR PROPER OPERATION. ALL VOLUME CONTROL DAMPERS AND OUTLETS SHALL BE WIDE OPEN AT THIS TIME.
3. BEFORE ANY HYDRONIC, DOMESTIC WATER OR APPLICABLE SYSTEM BALANCING WORK IS DONE, THE SYSTEMS SHALL BE CHECKED FOR PLUGGED STRAINERS, PROPER PUMP ROTATION, CONTROL VALVE INSTALLATION AND OPERATION, AIR LOCKS, SYSTEM STATIC PRESSURE, FLOW METER; AND CHECK VALVE INSTALLATION. ALL THROTTLING DEVICES AND CONTROL VALVES SHALL BE OPEN AT THIS TIME.

E. GENERAL SYSTEM AND EQUIPMENT PROCEDURES:

1. BALANCE ALL AIR AND WATER FLOWS AT TERMINALS TO WITHIN +10% TO -5% OF DESIGN FLOW QUANTITIES. NOTIFY CONTRACTOR/ENGINEER IN WRITING OF CONDITIONS DETRIMENTAL TO THE PROPER COMPLETION OF THE TEST AND BALANCE WORK.
2. MINIMUM COOLING CFM FOR VAV TERMINALS SHALL BE SET AT 10% OF MAXIMUM DESIGN.
3. RECORD PRIMARY AND AMBIENT AIR, DRY BULB AND WET BULB TEMPERATURES AT THE TIME OF TESTING.
4. CHECK AND CALIBRATE ALL THERMOSTATS AND TEMPERATURE SENSORS. REPORT TO THE GENERAL CONTRACTOR ANY MALFUNCTIONING THERMOSTAT AND SENSORS AND REPAIR OR REPLACE AS REQUIRED.

F. TEST AND BALANCE REQUIREMENTS:

1. GENERAL EXHAUST FANS:
    a. ADJUST CFM TO SYSTEM REQUIREMENTS. FOR BELT DRIVE, INCLUDE SHEAVE AND BELT EXCHANGE TO DELIVER AIRFLOW WITHIN LIMITS OF INSTALLED MOTOR HORSEPOWER AND MECHANICAL STRESS LIMITS OF THE FAN.
    b. MEASURE AND REPORT STATIC PRESSURES UPSTREAM AND DOWNSTREAM OF FANS (DUCTED UNITS ONLY)
    c. MEASURE AND REPORT FAN RPM.
    d. REPORT DESIGN FAN INLET AND OUTLET SIZES, ACTUAL INLET AND OUTLET SIZES, AND DESIGN AND ACTUAL VELOCITIES THROUGH THE ORIFICE.

G. REPORT OF WORK:

1. THE TESTING AND BALANCING CONTRACTOR SHALL SUBMIT ELECTRONIC (PDF) COPIES OF THE FINAL TESTING AND BALANCING REPORT AT LEAST FIFTEEN (15) CALENDAR DAYS PRIOR TO THE DATE FOR WHICH THE MECHANICAL CONTRACTOR REQUESTS FINAL INSPECTION.
2. A COMPLETE REDUCED SET OF MECHANICAL CONTRACT DRAWINGS (SHOWING EACH SYSTEM) SHALL BE INCLUDED IN THE REPORT, WITH ALL EQUIPMENT, FLOW MEASURING DEVICES, TERMINALS, CLEARLY MARKED AND ALL EQUIPMENT DESIGNATED. THE TEST AND BALANCE CONTRACTOR CAN OBTAIN DRAWING FILES FROM THE ENGINEER FOR DEVELOPMENT OF THESE DRAWINGS.
3. THE REPORT SHALL INCLUDE A LIST OF ALL EQUIPMENT USED IN THE TESTING AND BALANCING WORK.
4. THIS PROJECT WILL NOT BE CONSIDERED SUBSTANTIALLY COMPLETE UNTIL A SATISFACTORY REPORT IS RECEIVED. THE TESTING & BALANCING CONTRACTOR SHALL RESPOND TO AND CORRECT ALL DEFICIENCIES WITHIN SEVEN (7) DAYS OF RECEIVING THE ENGINEER'S WRITTEN REVIEW OF THE BALANCING REPORT. FAILURE TO COMPLY WILL RESULT IN HOLDING RETAINAGE OF THE FINAL PAYMENT UNTIL ALL ITEMS HAVE BEEN CORRECTED TO THE SATISFACTION OF THE ENGINEER.

H. GUARANTEE OF WORK:

1. THE TESTING & BALANCING CONTRACTOR SHALL GUARANTEE THE ACCURACY OF THE TESTING AND BALANCING FOR A PERIOD OF 90 DAYS FROM THE DATE OF FINAL ACCEPTANCE OF THE TEST AND BALANCE REPORT. DURING THIS PERIOD, THE TESTING & BALANCING CONTRACTOR SHALL MAKE PERSONNEL AVAILABLE AT NO COST TO THE OWNER TO CORRECT DEFICIENCIES THAT MAY BECOME APPARENT IN THE SYSTEM BALANCE.

Ramirez, Johnson, & Associates
3301 Lawrence St. Ste 2
Denver, CO 80205
P: 720.598.0774

JUST ARCHITECTURE & DESIGN
PHONE: (720) 323-1493
email: kyle@justarchitectureanddesign.com
9815 Westbury Ct, Highlands Ranch, CO 80129

ANDREW T. ACHTERMANN
REGISTERED
52554
09/15/2023
PROFESSIONAL ENGINEER
STATE OF COLORADO

STAMP

PROSPECT LAKE
EQUIPMENT BUILDING

PROSPECT LAKE, COLORADO SPRINGS, CO

#	DATE	ISSUE
1	2-20-23	1ST PERMIT
2	9-15-23	2ND PERMIT
3		
4		
5		
6		

PROJECT NUMBER: 23-001
DRAWN BY: ATA
CHECKED BY: SKZ

ALL INSTRUMENTS OF SERVICE, ALL DESIGNS, IDEAS AND INFORMATION SHOWN ON THESE DRAWINGS ARE AND SHALL REMAIN THE PROPERTY OF JUST ARCHITECTURE & DESIGN, LTD. NO PART THEREOF SHALL BE COPIED, DISCLOSED TO OTHERS, OR USED IN CONNECTION WITH ANY PROJECT OTHER THAN THE SPECIFIC PROJECT FOR WHICH THEY HAVE BEEN PREPARED WITHOUT THE WRITTEN CONSENT OF JUST ARCHOITECTURE & DESIGN, LTD. VISUAL CONTACT WITH THESE DRAWINGS SHALL CONSTITUTE CONCLUSIVE EVIDENCE OF ACCEPTANCE OF THESE RESTRICTIONS

MECHANICAL SPECIFICATIONS

M002

Released for Permit
09/22/2023 10:53:43 AM
Pikes Peak REGIONAL Building Department
JustinC
MECHANICAL

Ramirez, Johnson, & Associates
3301 Lawrence St. Ste 2
Denver, CO 80205
P: 720.598.0774

COM*check* Software Version 4.1.5.3
Mechanical Compliance Certificate

Project Information

Energy Code: 2015 IECC
Project Title: Prospect Lake Equipment Shed
Location: Colorado Springs, Colorado
Climate Zone: 5b
Project Type: New Construction

Construction Site:
Prospect Lake
Colorado Springs, CO 80910

Owner/Agent:

Designer/Contractor:
Ramirez, Johnson, and Associates
3301 Lawrence St
Suite 2
Denver, CO 80205
720.598.0774

Additional Efficiency Package(s)

Credits: 1.0 Required 1.0 Proposed
Reduced Lighting Power, 1.0 credit

Mechanical Systems List

Quantity	System Type & Description
1	EUH-1 (Single Zone): Heating: 1 each - Unit Heater (Electric Heater), Electric, Capacity = 10 kBtu/h No minimum efficiency requirement applies Fan System: FAN SYSTEM 1 -- Compliance (Motor nameplate HP method) : Passes Fans: FAN 1 Supply, Constant Volume, 350 CFM, 0.0 motor nameplate hp, 0.5 fan efficiency grade

Mechanical Compliance Statement

Compliance Statement: The proposed mechanical design represented in this document is consistent with the building plans, specifications, and other calculations submitted with this permit application. The proposed mechanical systems have been designed to meet the 2015 IECC requirements in COM*check* Version 4.1.5.3 and to comply with any applicable mandatory requirements listed in the Inspection Checklist.

Name - Title Signature Date

COM*check* Software Version 4.1.5.3
Inspection Checklist

Energy Code: 2015 IECC

Requirements: 22.0% were addressed directly in the COM*check* software

Text in the "Comments/Assumptions" column is provided by the user in the COMcheck Requirements screen. For each requirement, the user certifies that a code requirement will be met and how that is documented, or that an exception is being claimed. Where compliance is itemized in a separate table, a reference to that table is provided.

Section # & Req.ID	Plan Review	Complies?	Comments/Assumptions
C103.2 [PR2][1]	Plans, specifications, and/or calculations provide all information with which compliance can be determined for the mechanical systems and equipment and document where exceptions to the standard are claimed. Load calculations per acceptable engineering standards and handbooks.	☐Complies ☐Does Not ☐Not Observable ☐Not Applicable	
C406 [PR9][1]	Plans, specifications, and/or calculations provide all information with which compliance can be determined for the additional energy efficiency package options.	☐Complies ☐Does Not ☐Not Observable ☐Not Applicable	

Additional Comments/Assumptions:

1 High Impact (Tier 1) 2 Medium Impact (Tier 2) 3 Low Impact (Tier 3)

Section # & Req.ID	Footing / Foundation Inspection	Complies?	Comments/Assumptions
C403.2.4.5, C403.2.4.6 [FO9][3]	Snow/ice melting system sensors for future connection to controls. Freeze protection systems have automatic controls installed.	☐Complies ☐Does Not ☐Not Observable ☐Not Applicable	

Additional Comments/Assumptions:

1 High Impact (Tier 1) 2 Medium Impact (Tier 2) 3 Low Impact (Tier 3)

Section # & Req.ID	Plumbing Rough-In Inspection	Complies?	Comments/Assumptions
C404.5, C404.5.1, C404.5.2 [PL6][3]	Heated water supply piping conforms to pipe length and volume requirements. Refer to section details.	☐Complies ☐Does Not ☐Not Observable ☐Not Applicable	
C404.6.3 [PL7][3]	Pumps that circulate water between a heater and storage tank have controls that limit operation from startup to <= 5 minutes after end of heating cycle.	☐Complies ☐Does Not ☐Not Observable ☐Not Applicable	
C404.7 [PL8][3]	Water distribution system that pumps water from a heated-water supply pipe back to the heated-water source through a cold-water supply pipe is a demand recirculation water system. Pumps within this system have controls that start the pump upon receiving a signal from the action of a user of a fixture or appliance and limits the temperature of the water entering the cold-water piping to 104°F.	☐Complies ☐Does Not ☐Not Observable ☐Not Applicable	

Additional Comments/Assumptions:

1 High Impact (Tier 1) 2 Medium Impact (Tier 2) 3 Low Impact (Tier 3)

Section # & Req.ID	Mechanical Rough-In Inspection	Complies?	Comments/Assumptions
C402.2.6 [ME41][3]	Thermally ineffective panel surfaces of sensible heating panels have insulation >= R-3.5.	☐Complies ☐Does Not ☐Not Observable ☐Not Applicable	
C403.2.13 [ME71][2]	Unenclosed spaces that are heated use only radiant heat.	☐Complies ☐Does Not ☐Not Observable ☐Not Applicable	
C403.2.3 [ME55][2]	HVAC equipment efficiency verified.	☐Complies ☐Does Not ☐Not Observable ☐Not Applicable	*See the Mechanical Systems list for values.*
C403.2.6.1 [ME59][1]	Demand control ventilation provided for spaces >500 ft2 and >25 people/1000 ft2 occupant density and served by systems with air side economizer, auto modulating outside air damper control, or design airflow >3,000 cfm.	☐Complies ☐Does Not ☐Not Observable ☐Not Applicable	
C403.2.6.2 [ME115][3]	Enclosed parking garage ventilation has automatic contaminant detection and capacity to stage or modulate fans to 50% or less of design capacity.	☐Complies ☐Does Not ☐Not Observable ☐Not Applicable	
C403.2.7 [ME57][1]	Exhaust air energy recovery on systems meeting Table C403.2.7(1) and C403.2.7(2).	☐Complies ☐Does Not ☐Not Observable ☐Not Applicable	
C403.2.8 [ME116][3]	Kitchen exhaust systems comply with replacement air and conditioned supply air limitations, and satisfy hood rating requirements and maximum exhaust rate criteria.	☐Complies ☐Does Not ☐Not Observable ☐Not Applicable	
C403.2.9 [ME60][2]	HVAC ducts and plenums insulated. Where ducts or plenums are installed in or under a slab, verification may need to occur during Foundation Inspection.	☐Complies ☐Does Not ☐Not Observable ☐Not Applicable	
C403.2.9 [ME10][2]	Ducts and plenums sealed based on static pressure and location.	☐Complies ☐Does Not ☐Not Observable ☐Not Applicable	
C403.2.9.1.3 [ME11][3]	Ductwork operating >3 in. water column requires air leakage testing.	☐Complies ☐Does Not ☐Not Observable ☐Not Applicable	
C403.4.4.6 [ME110][3]	Multiple zone VAV systems with DDC of individual zone boxes have static pressure setpoint reset controls.	☐Complies ☐Does Not ☐Not Observable ☐Not Applicable	*See the Mechanical Systems list for values.*
C408.2.2.1 [ME53][3]	Air outlets and zone terminal devices have means for air balancing.	☐Complies ☐Does Not ☐Not Observable ☐Not Applicable	

1 High Impact (Tier 1) 2 Medium Impact (Tier 2) 3 Low Impact (Tier 3)

Section # & Req.ID	Mechanical Rough-In Inspection	Complies?	Comments/Assumptions
C403.5, C403.5.1, C403.5.2 [ME123][3]	Refrigerated display cases, walk-in coolers or walk-in freezers served by remote compressors and remote condensers not located in a condensing unit, have fan-powered condensers that comply with Sections C403.5.1 and refrigeration compressor systems that comply with C403.5.2..	☐Complies ☐Does Not ☐Not Observable ☐Not Applicable	

Additional Comments/Assumptions:

1 High Impact (Tier 1) 2 Medium Impact (Tier 2) 3 Low Impact (Tier 3)

Section # & Req.ID	Final Inspection	Complies?	Comments/Assumptions
C303.3, C408.2.5.3 [FI8][3]	Furnished O&M manuals for HVAC systems within 90 days of system acceptance.	☐Complies ☐Does Not ☐Not Observable ☐Not Applicable	
C403.2.2 [FI27][3]	HVAC systems and equipment capacity does not exceed calculated loads.	☐Complies ☐Does Not ☐Not Observable ☐Not Applicable	
C403.2.4.1 [FI47][3]	Heating and cooling to each zone is controlled by a thermostat control. Minimum one humidity control device per installed humidification/dehumidification system.	☐Complies ☐Does Not ☐Not Observable ☐Not Applicable	
C403.2.4.1.2 [FI38][3]	Thermostatic controls have a 5 °F deadband.	☐Complies ☐Does Not ☐Not Observable ☐Not Applicable	
C403.2.4.1.3 [FI20][3]	Temperature controls have setpoint overlap restrictions.	☐Complies ☐Does Not ☐Not Observable ☐Not Applicable	
C403.2.4.2 [FI39][3]	Each zone equipped with setback controls using automatic time clock or programmable control system.	☐Complies ☐Does Not ☐Not Observable ☐Not Applicable	
C403.2.4.2.1, C403.2.4.2.2 [FI40][3]	Automatic Controls: Setback to 55°F (heat) and 85°F (cool); 7-day clock, 2-hour occupant override, 10-hour backup	☐Complies ☐Does Not ☐Not Observable ☐Not Applicable	
C403.2.4.2.3 [FI41][3]	Systems include optimum start controls.	☐Complies ☐Does Not ☐Not Observable ☐Not Applicable	
C408.2.1 [FI28][1]	Commissioning plan developed by registered design professional or approved agency.	☐Complies ☐Does Not ☐Not Observable ☐Not Applicable	
C408.2.3.1 [FI31][1]	HVAC equipment has been tested to ensure proper operation.	☐Complies ☐Does Not ☐Not Observable ☐Not Applicable	
C408.2.3.2 [FI10][1]	HVAC control systems have been tested to ensure proper operation, calibration and adjustment of controls.	☐Complies ☐Does Not ☐Not Observable ☐Not Applicable	
C408.2.4 [FI29][1]	Preliminary commissioning report completed and certified by registered design professional or approved agency.	☐Complies ☐Does Not ☐Not Observable ☐Not Applicable	

1 High Impact (Tier 1) 2 Medium Impact (Tier 2) 3 Low Impact (Tier 3)

Section # & Req.ID	Final Inspection	Complies?	Comments/Assumptions
C408.2.5.1 [FI7][3]	Furnished HVAC as-built drawings submitted within 90 days of system acceptance.	☐Complies ☐Does Not ☐Not Observable ☐Not Applicable	
C408.2.5.3 [FI43][1]	An air and/or hydronic system balancing report is provided for HVAC systems.	☐Complies ☐Does Not ☐Not Observable ☐Not Applicable	
C408.2.5.4 [FI30][1]	Final commissioning report due to building owner within 90 days of receipt of certificate of occupancy.	☐Complies ☐Does Not ☐Not Observable ☐Not Applicable	

Additional Comments/Assumptions:

1 High Impact (Tier 1) 2 Medium Impact (Tier 2) 3 Low Impact (Tier 3)

Released for Permit
09/22/2023 10:53:43 AM
Pikes Peak Regional Building Department
MECHANICAL

JUST ARCHITECTURE & DESIGN
PHONE: (720) 323-1493
email: kyle@justarchitectureanddesign.com
9815 Westbury Ct, Highlands Ranch, CO 80129

ANDREW T. ACHTERMANN REGISTERED PROFESSIONAL ENGINEER 52554 09/15/2023 STATE OF COLORADO

STAMP

PROSPECT LAKE EQUIPMENT BUILDING
PROSPECT LAKE, COLORADO SPRINGS, CO

#	DATE	ISSUE
1	2-20-23	1ST PERMIT
2	9-15-23	2ND PERMIT
3		
4		
5		
6		

PROJECT NUMBER: 23-001
DRAWN BY: ATA
CHECKED BY: SKZ

ALL INSTRUMENTS OF SERVICE, ALL DESIGNS, IDEAS AND INFORMATION SHOWN ON THESE DRAWINGS ARE AND SHALL REMAIN THE PROPERTY OF JUST ARCHITECTURE & DESIGN, LTD. NO PART THEREOF SHALL BE COPIED, DISCLOSED TO OTHERS, OR USED IN CONNECTION WITH ANY PROJECT OTHER THAN THE SPECIFIC PROJECT FOR WHICH THEY HAVE BEEN PREPARED WITHOUT THE WRITTEN CONSENT OF JUST ARCHOITECTURE & DESIGN, LTD. VISUAL CONTACT WITH THESE DRAWINGS SHALL CONSTITUTE CONCLUSIVE EVIDENCE OF ACCEPTANCE OF THESE RESTRICTIONS

COMCHECK

1 M003

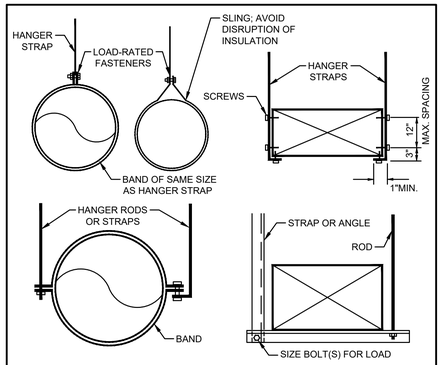

1 DUCT SUPPORT DETAIL

SCALE: NO SCALE

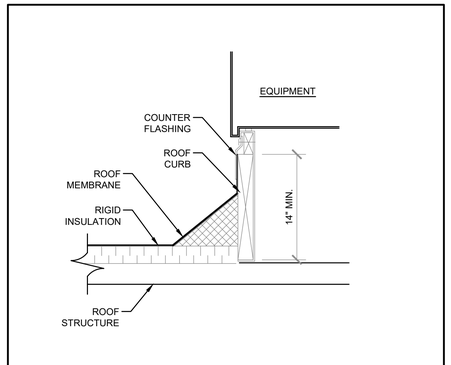

2 ROOF CURB DETAIL

SCALE: NO SCALE

FAN SCHEDULE

TAG	MANUFACTURER AND MODEL NUMBER	SERVICE	TYPE	FAN: ALT AIRFLOW RATE (CFM)	FAN: ESP (IN.WC)	FAN: DRIVE	FAN: INLET SONES	ELECTRICAL: HP	ELECTRICAL: VOLT/PH/HZ	WEIGHT (LBS)	NOTES
EF-1	GREENHECK CUE-200-VG	SHED COOLING	UP-BLAST CENTRIFUGAL	4,750	0.50	ECM	19.4	3.0	208/1/60	250	1,2,3,4,5

NOTES:
1. ECM MOTOR WITH FACTORY MOUNTED SPEED CONTROLLER
2. FACTORY FURNISHED NON-FUSED DISCONNECT.
3. PROVIDE FACTORY MOTORIZED DAMPER (LOW LEAKAGE). DAMPER SHALL OPEN FULLY WHEN FAN IS ENERGIZED.
4. PROVIDE FACTORY 14" ROOF CURB (MATCH SLOPE OF ROOF).
5. PROVIDE COOLING THERMOSTAT FOR FAN CONTROL (COOLING SET POINT 95 DEG F, ADJ.)

GRILLE REGISTER & DIFFUSER SCHEDULE

TAG	MANUFACTURER AND MODEL NUMBER	TYPE	MODULE SIZE	NECK SIZE	FINISH	PERFORMANCE: MAX NC	PERFORMANCE: MAX ADP (IN.WC)	NOTES
EG-1	PRICE 510	LOUVERED EXHAUST	SEE PLANS	SEE PLANS	WHITE	45	0.10	1

NOTES:
1 LOUVERED GRILLE WITH 3/4' BLADE SPACING AND 0 DEG DEFLECTION

ELECTRIC HEATER SCHEDULE

TAG	MANUFACTURER AND MODEL NUMBER	SERVICE	ELECTRICAL: INPUT (WATTS)	ELECTRICAL: AMPS	ELECTRICAL: VOLT/PH/HZ	WEIGHT (LBS)	NOTES
EUH-1	BERKO HUHAA320	SHED HEAT	3,000	14.5	208/1/60	25	1,2,3

NOTES:
1. FAN CYCLE WALL MOUNTED THERMOSTAT WITH CONTROL TRANSFORMER.
2. FACTORY FURNISHED NON-FUSED DISCONNECT.
3. FACTORY WALL/CEILING MOUNTING BRACKET.

LOUVER SCHEDULE

TAG	MANUFACTURER & MODEL NUMBER	TYPE	MODULE SIZE	FREE AREA (SF)	PRESSURE DROP (IN WC)	FINISH	NOTES
IL-1	GREENHECK ESD-435	DRAINABLE	60x24	4.74	0.15	(3)	1,2

NOTES:
1. PROVIDE BIRD SCREEN.
2. PROVIDE ELECTRIC ACTUATOR (120V/1PH) INTERLOCKED WITH EF-1. DAMPER TO OPEN UPON EF-1 ENERGIZING.
3. FACTORY PRIMED FOR FIELD PAINTING. COORDINATE COLOR WITH ARCHITECT/OWNER.

Released for Permit
09/22/2023 10:13:43 AM
REGIONAL Building Department
JUSTARC
MECHANICAL

Ramirez, Johnson, & Associates
3301 Lawrence St. Ste 2
Denver, CO 80205
P: 720.598.0774

JUST ARCHITECTURE & DESIGN
PHONE: (720) 323-1493
email: kyle@justarchitectureanddesign.com
9815 Westbury Ct. Highlands Ranch, CO 80129

ANDREW T. ACHTERKNECHT REGISTERED 52554 09/15/2023 PROFESSIONAL ENGINEER STATE OF COLORADO

STAMP

PROSPECT LAKE EQUIPMENT BUILDING

PROSPECT LAKE, COLORADO SPRINGS, CO

#	DATE	ISSUE
1	2-20-23	1ST PERMIT
2	9-15-23	2ND PERMIT
3		
4		
5		
6		

PROJECT NUMBER: 23-001
DRAWN BY: ATA
CHECKED BY: SKZ

ALL INSTRUMENTS OF SERVICE, ALL DESIGNS, IDEAS AND INFORMATION SHOWN ON THESE DRAWINGS ARE AND SHALL REMAIN THE PROPERTY OF JUST ARCHITECTURE & DESIGN, LTD. NO PART THEREOF SHALL BE COPIED, DISCLOSED TO OTHERS, OR USED IN CONNECTION WITH ANY PROJECT OTHER THAN THE SPECIFIC PROJECT FOR WHICH THEY HAVE BEEN PREPARED WITHOUT THE WRITTEN CONSENT OF JUST ARCHITECTURE & DESIGN, LTD. VISUAL CONTACT WITH THESE DRAWINGS SHALL CONSTITUTE CONCLUSIVE EVIDENCE OF ACCEPTANCE OF THESE RESTRICTIONS

SCHEDULES & DETAILS

M004

GENERAL NOTES

A. ALL WORK SHOWN SHALL COMPLY WITH ALL NATIONAL, STATE AND LOCAL CODES AND ORDINANCES.

B. REFERENCE ALL OTHER DRAWINGS AND SPECIFICATIONS FOR ADDITIONAL WORK OR CLARIFICATION OF NECESSARY WORK.

KEY NOTES ⟨#⟩

1. ELECTRIC UNIT HEATER, EUH-1, SUSPENDED FROM STRUCTURE. CONTRACTOR SHALL MOUNT TOP OF HEATER AT 2" BELOW FINISHED CEILING. INSTALL PER MFG'S INSTALLATION INSTRUCTIONS.

2. 18"x18" EXHAUST DUCT UP THRU ROOF TO EF-1. PROVIDE EXHAUST GRILLE, SIZE NOTED AT CEILING. TRANSITION TO GRILLE BTWN ROOF TRUSSES.

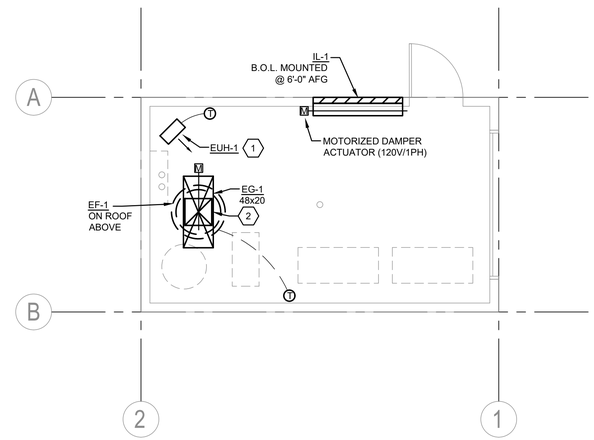

1 MECHANICAL PLAN

SCALE: 1/4" = 1'-0"

Ramirez, Johnson, & Associates
3301 Lawrence St. Ste 2
Denver, CO 80205
P: 720.598.0774

JUST ARCHITECTURE & DESIGN

PHONE: (720) 323-1493
email: kyle@justarchitectureanddesign.com
9815 Westbury Ct. Highlands Ranch, CO 80129

ANDREW T. ACHTERMANN
REGISTERED
52554
09/15/2023
PROFESSIONAL ENGINEER
STATE OF COLORADO

STAMP

PROSPECT LAKE EQUIPMENT BUILDING

PROSPECT LAKE, COLORADO SPRINGS, CO

#	DATE	ISSUE
1	2-20-23	1ST PERMIT
2	9-15-23	2ND PERMIT
3		
4		
5		
6		

PROJECT NUMBER: 23-001
DRAWN BY: ATA
CHECKED BY: SKZ

ALL INSTRUMENTS OF SERVICE, ALL DESIGNS, IDEAS AND INFORMATION SHOWN ON THESE DRAWINGS ARE AND SHALL REMAIN THE PROPERTY OF JUST ARCHITECTURE & DESIGN, LTD, NO PART THEREOF SHALL BE COPIED, DISCLOSED TO OTHERS, OR USED IN CONNECTION WITH ANY PROJECT OTHER THAN THE SPECIFIC PROJECT FOR WHICH THEY HAVE BEEN PREPARED WITHOUT THE WRITTEN CONSENT OF JUST ARCHOTECTURE & DESIGN, LTD. VISUAL CONTACT WITH THESE DRAWINGS SHALL CONSTITUTE CONCLUSIVE EVIDENCE OF ACCEPTANCE OF THESE RESTRICTIONS

MECHANICAL PLAN

1

M101

Released for Permit
09/22/2023 10:53:43 AM
REGIONAL BUILDING DEPARTMENT
Discipline
MECHANICAL

MECHANICAL SYMBOLS

PIPING / PLUMBING

- DOMESTIC COLD WATER PIPING
- DOMESTIC HOT WATER PIPING
- DOMESTIC HOT WATER RECIRC. PIPING
- SAN — SANITARY PIPING
- V — VENT PIPING
- LPG — LIQUEFIED PETROLEUM GAS PIPING
- G — NATURAL GAS PIPING
- CA — COMPRESSED AIR PIPING
- PIPING ELBOW UP
- PIPING ELBOW DOWN
- PIPING TEE UP
- PIPING TEE DOWN
- HB WH — HOSE BIBB / WALL HYDRANT
- SHUTOFF VALVE
- GAS COCK
- BALL VALVE
- CO WCO — LINE CLEANOUT / WALL CLEANOUT
- FCO — FLOOR CLEANOUT
- FS-1 — FLOOR SINK
- FD-1 — FLOOR DRAIN
- VTR — VENT THRU ROOF

NOTE:

THIS IS A MASTER SYMBOLS LIST. ALL SYMBOLS, ABBREVIATIONS, ETC. MAY NOT NECESSARILY BE USED ON ALL DRAWINGS.

MISCELLANEOUS

- CONNECTION POINT OF NEW WORK TO EXISTING
- 1 / M1 — DETAIL REFERENCE: UPPER NUMBER INDICATES DETAIL NUMBER LOWER NUMBER INDICATES SHEET NUMBER
- 1 — NOTE REFERENCE SYMBOL

ABBREVIATIONS

AFF	ABOVE FINISHED FLOOR
AFG	ABOVE FINISHED GRADE
AHU	AIR HANDLING UNIT
BD	BACKDRAFT DAMPER, BLOWDOWN
BFF	BELOW FINISHED FLOOR
BOD	BOTTOM OF DUCT
BOS	BOTTOM OF STRUCTURE
BTU	BRITISH THERMAL UNIT
CA	COMPRESSED AIR
CFM	CUBIC FEET PER MINUTE
CO	CLEANOUT
D	DEMOLISH
DN	DOWN
E	EXISTING
EA	EXHAUST AIR
EAT	ENTERING AIR TEMPERATURE
EC	ELECTRICAL CONTRACTOR
EDB	ENTERING DRY BULB
EF	EXHAUST FAN
EPO	EMERGENCY POWER OFF
ETR	EXISTING TO REMAIN
EWB	ENTERING WET BULB
FACP	FIRE ALARM CONTROL PANEL
FCO	FLOOR CLEANOUT
FD	FIRE DAMPER, FLOOR DRAIN
FF	FINISHED FLOOR
FSD	FIRE/SMOKE DAMPER
GCO	GRADE CLEANOUT
GPM	GALLONS PER MINUTE
HB	HOSE BIBB
HOA	HANDS OFF AUTOMATIC
HTG	HEATING
IE	INVERT ELEVATION
IN WC	INCHES OF WATER COLUMN
LAT	LEAVING AIR TEMPERATURE
LDB	LEAVING DRY BULB
LP	LOW PRESSURE
LRA	LOCKED ROTOR AMPS
LWB	LEAVING WET BULB
LWT	LEAVING WATER TEMPERATURE
MBH	1000 BTU PER HOUR
MC	MECHANICAL CONTRACTOR
MCA	MINIMUM CIRCUIT AMPACITY
MD	MOTORIZED DAMPER
MFR	MANUFACTURER
MTD	MOUNTED
NA	NOT APPLICABLE
NC	NOISE CRITERIA
NIC	NOT IN CONTRACT
NO, NC	NORMALLY OPEN, NORMALLY CLOSED
OA	OUTSIDE AIR
PHØ	PHASE
QTY	QUANTITY
RA	RETURN AIR
RH	RELATIVE HUMIDITY
RL	RELOCATE
RPM	REVOLUTIONS PER MINUTE
SA	SUPPLY AIR
SD	SMOKE DETECTOR
SF	SQUARE FEET
SP	STATIC PRESSURE
TA	TRANSFER AIR
TSTAT	THERMOSTAT
UC	UNDERCUT
UH	UNIT HEATER
UL	UNDERWRITERS LABORATORIES, INC.
VCD	VOLUME CONTROL DAMPER
W, W/O	WITH, WITHOUT
WB	WET BULB
WCO	WALL CLEANOUT
WC	WATER COLUMN

MECHANICAL/PLUMBING GENERAL NOTES

1. REFER TO PLANS FOR ADDITIONAL NOTES.
2. THE PLANS ARE, TO A GREAT EXTENT, DIAGRAMMATIC IN NATURE. DRAWING SCALES SHOULD BE VERIFIED FROM DIMENSIONS ON ARCH. PLANS. THE INFORMATION PRESENTED IS AS EXACT AS COULD BE SECURED. THE CONTRACTOR SHALL OBTAIN EXACT LOCATION, MEASUREMENTS LEVELS, ETC. AT THE SITE AND SHALL SATISFACTORILY ADAPT THE WORK TO THE ACTUAL CONDITIONS AT THE PROJECT SITE.
3. CONTRACTOR SHALL VISIT THE JOB SITE PRIOR TO SUBMITTING A BID TO COVER THE CONDITIONS AT THE SITE, INFORMING THEMSELVES OF ALL DETAILS.
4. ALL WORK SHALL COMPLY WITH ALL APPLICABLE FEDERAL, STATE, AND LOCAL CODES, LAWS, ACTS, AND ORDINANCES, AND ALL AUTHORITIES HAVING JURISDICTION.
5. THE COMPLETED INSTALLATION SHALL BE IN ACCORDANCE WITH ALL ENGINEERING REQUIREMENTS, THE OWNER'S DESIGN CRITERIA, UTILITY COMPANY REQUIREMENTS, APPLICABLE INDUSTRY STANDARDS OF GOOD PRACTICE AND SAFETY, AND THE MANUFACTURER'S STRICTEST RECOMMENDATIONS FOR EQUIPMENT,PRODUCT APPLICATION, AND INSTALLATION.
6. MANUFACTURERS' NAMES ON WHICH THIS SPECIFICATION IS BASED INDICATE THE MINIMUM QUALITY OF PRODUCT REQUIRED BY ARCHITECT/ENGINEER. SUBSTITUTIONS MAY BE MADE TO THOSE SPECIFIED IF DEEMED EQUIVALENT BY THE ARCHITECT/ENGINEER DURING SUBMITTAL REVIEW.
7. RECORD DRAWINGS - PREPARE AND SUBMIT TO THE OWNER RECORD DRAWINGS INDICATING THE EXACT LOCATION OF ALL EQUIPMENT INCLUDING THE EQUIPMENT'S "AS INSTALLED" SIZE(S), MANUFACTURER, MODEL NUMBERS, AND PERFORMANCE RATINGS.
8. SUPPORTS - EQUIPMENT, PIPING, DUCTWORK, OR ANY OTHER ACCESSORY SHALL NOT BE SUPPORTED FROM OTHER PIPING, DUCTWORK, METAL ROOF DECK, LATERAL BRACING BRIDGING, OR CONDUIT. ITEMS SHALL ONLY BE SUPPORTED FROM BUILDING STRUCTURE.
9. COORDINATE EXACT LOCATION OF ALL DUCTWORK, AIR TERMINAL UNITS, PIPING, ETC., WITH STRUCTURAL, ARCHITECTURAL, ELECTRICAL, AND OTHER MECHANICAL SYSTEMS.
10. WHERE MOUNTING HEIGHTS ARE NOT DETAILED OR DIMENSIONED, INSTALL MECHANICAL SERVICES AND OVERHEAD EQUIPMENT TO PROVIDE THE MAXIMUM HEADROOM POSSIBLE.
11. ALL DUCTWORK, PIPING, AND TEMPERATURE CONTROL CONDUIT TO VIBRATING EQUIPMENT SHALL HAVE FLEXIBLE CONNECTORS.
12. IF ASBESTOS IS ENCOUNTERED OR SUSPECTED, HALT WORK IMMEDIATELY IN THESE AREAS AND NOTIFY CONTRACTING OFFICERS REPRESENTATIVE BEFORE PROCEEDING. DO NOT DAMAGE OR DISTURB SUSPECTED ASBESTOS CONTAINING MATERIAL. COORDINATE ALL REMOVAL WITH THE CONSTRUCTION MANAGER AND OWNER.
13. COORDINATE ALL ROOF AND CHASE PENETRATIONS WITH STRUCTURAL DRAWINGS AND ROOF INSTALLER.
14. CONTRACTOR TO BE RESPONSIBLE FOR PROTECTION OF THEIR EMPLOYEES FROM ANY LEAD DUST THAT MAY BE ENCOUNTERED.
15. THE LOCATION OF UNDERGROUND UTILITIES IS SHOWN IN AN APPROXIMATE WAY ONLY. THE CONTRACTOR SHALL DETERMINE THE EXACT LOCATION OF ALL EXISTING UTILITIES BEFORE COMMENCING WORK.
16. ALL TESTS SHALL BE COMPLETED BEFORE ANY MECHANICAL EQUIPMENT OR PIPING INSULATION IS APPLIED.
17. CONTRACTOR TO COORDINATE DUCTWORK WITH FIRE RATED WALLS AND FLOORS SHOWN ON ARCHITECTURAL DRAWINGS, MAINTAINING NECESSARY RATING OF WALLS. CONTRACTOR IS RESPONSIBLE FOR ALL CONNECTIONS TO SMOKE-FIRE DAMPERS.
18. ALL DUCTWORK DIMENSIONS, AS SHOWN ON THE DRAWINGS, ARE INTERNAL CLEAR DIMENSIONS AND DUCT SIZE SHALL BE INCREASED TO COMPENSATE FOR DUCT LINING THICKNESS.
19. MECHANICAL CONTRACTOR IS COMPLETELY RESPONSIBLE FOR PROVIDING ALL PRESSURE AND/OR TEMPERATURE TAPS IN PIPING AS REQUIRED FOR PROPER BALANCING OF ALL SYSTEMS.
20. BEFORE INSTALLATION, EQUIPMENT CONTRACTOR SHALL VERIFY THAT COILS CAN BE REMOVED WITHOUT INTERFERENCE. CONTRACTOR SHALL PROVIDE ADEQUATE ACCESS AND COIL REMOVAL SPACE FOR ALL EQUIPMENT.
21. ACCESS PANELS ARE REQUIRED (MIN. 18"X18") FOR ACCESS TO EVERY VALVE, DAMPER, AIR TERMINAL UNIT, AND CONTROL SENSOR IF NOT OTHERWISE ACCESSIBLE. ACCESS PANEL SHALL BE APPROVED BY ARCHITECT/ENGINEER.
22. SMOKE DETECTORS SHALL BE FURNISHED AND WIRED BY THE ELECTRICAL CONTRACTOR. THE MECHANICAL CONTRACTOR SHALL BE RESPONSIBLE FOR MOUNTING THE SMOKE DETECTOR IN DUCTWORK AS SHOWN ON THE ELECTRICAL DRAWINGS AND IN ACCORDANCE WITH MANUFACTURER'S PRINTED INSTRUCTIONS.

SCOPE OF WORK

PLUMBING

- DOMESTIC WATER AND FLOOR DRAIN FOR COMPRESSOR CONDENSATE DISPOSAL AND GENERAL SANITATION FOR FACILITY.
- SANITARY DRAINAGE TO BE DISCHARGED INTO ON SITE DRY WELL.

CODE SUMMARY

REGIONAL BUILDING CODE	2017 RBC
BUILDING	2015 IBC
FIRE	2015 IFC
MECHANICAL	2015 IMC
PLUMBING	2018 IPC
ENERGY CONSERVATION	2015 IECC
ELECTRICAL	2020 NEC

Ramirez, Johnson, & Associates
3301 Lawrence St. Ste 2
Denver, CO 80205
P: 720.598.0774

JUST ARCHITECTURE & DESIGN
PHONE: (720) 323-1493
email: kyle@justarchitectureanddesign.com
9815 Westbury Ct. Highlands Ranch, CO 80129

ANDREW T. ACHTEMEIER REGISTERED 52554 09/27/2023 PROFESSIONAL ENGINEER STATE OF COLORADO

STAMP

PROSPECT LAKE EQUIPMENT BUILDING

1313 E COSTILLA ST, COLORADO SPRINGS, CO

#	DATE	ISSUE
1	2/20/23	1ST PERMIT
2	9/27/23	2ND PERMIT
3		
4		
5		
6		

PROJECT NUMBER: 23-001
DRAWN BY: ATA
CHECKED BY: SKZ

ALL INSTRUMENTS OF SERVICE, ALL DESIGNS, IDEAS AND INFORMATION SHOWN ON THESE DRAWINGS ARE AND SHALL REMAIN THE PROPERTY OF JUST ARCHITECTURE & DESIGN, LTD. NO PART THEREOF SHALL BE COPIED, DISCLOSED TO OTHERS, OR USED IN CONNECTION WITH ANY PROJECT OTHER THAN THE SPECIFIC PROJECT FOR WHICH THEY HAVE BEEN PREPARED WITHOUT THE WRITTEN CONSENT OF JUST ARCHITECTURE & DESIGN, LTD. VISUAL CONTACT WITH THESE DRAWINGS SHALL CONSTITUTE CONCLUSIVE EVIDENCE OF ACCEPTANCE OF THESE RESTRICTIONS.

PLUMBING COVERSHEET

P001

Released for Permit
10/06/2023 11:38:00 AM
Pikes Peak REGIONAL Building Department
shanen
PLUMBING
10/06/2023 11:34:39 AM
Pikes Peak REGIONAL Building Department
shanen
PLUMBING

PLUMBING SPECIFICATIONS

A. GENERAL:

1. THE CONTRACTOR SHALL COORDINATE AND COOPERATE WITH ARCHITECT AND OWNER AT ALL TIMES FOR ALL NEW-TO-EXISTING CONNECTIONS, SYSTEM SHUTDOWNS, RESTART-UP, AND FLUSHING AND FILLING OF BOTH NEW AFFECTED SYSTEMS.
2. REPORT ANY DAMAGED EQUIPMENT OR SYSTEMS TO THE OWNER PRIOR TO ANY WORK.
3. INSTALL ALL EQUIPMENT AND MATERIALS IN SUCH A MANNER AS TO PROVIDE REQUIRED ACCESS FOR SERVICING AND MAINTENANCE. ALLOW AMPLE SPACE FOR REMOVAL OF ALL PARTS THAT REQUIRE REPLACEMENT OR SERVICING.
4. FURNISH HINGED STEEL ACCESS DOORS WITH CONCEALED LATCH, WHETHER SHOWN ON DRAWINGS OR NOT, WHERE REQUIRED FOR ACCESS TO ALL CONCEALED VALVES, SHOCK ABSORBERS, MOTORS, FANS, BALANCING COCKS, AND OTHER OPERATING DEVICES REQUIRING ADJUSTMENT OR SERVICING. ACCESS DOORS IN FIRE-RATED WALLS AND CEILINGS SHALL HAVE EQUIVALENT UL LABEL AND FIRE RATING.
5. IT IS THE INTENTION OF THESE SPECIFICATIONS AND DRAWINGS TO CALL FOR FINISHED WORK, TESTED AND READY FOR OPERATION. WHEREVER THE WORD "PROVIDE" IS USED, IT SHALL MEAN "FURNISH AND INSTALL COMPLETE AND READY FOR USE."
6. SECURE AND PAY FOR ALL PERMITS, TAP FEES, TAXES, ROYALTIES, LICENSES, AND INSPECTIONS IN CONNECTION WITH THE WORK SPECIFIED UNDER DIVISION 23.
7. ALL WORK SHALL COMPLY WITH ALL APPLICABLE CODES AND REGULATIONS.
8. DRAWINGS ARE DIAGRAMMATIC IN CHARACTER AND DO NOT NECESSARILY INDICATE EVERY REQUIRED OFFSET, VALVE, FITTING, ETC.
9. DRAWINGS SHALL NOT BE SCALED FOR ROUGH-IN MEASUREMENTS OR USED AS SHOP DRAWINGS. ALL DIMENSIONS SHALL BE VERIFIED IN FIELD.
10. ALL NEW, RELOCATED AND EXISTING MATERIALS, IN CEILING PLENUMS SHALL BE CLASS 1 RATED, NOT EXCEEDING RATING OF 25 FLAME SPREAD AND 50 SMOKE DEVELOPED. REMOVE AND REPLACE ALL EXISTING MATERIALS NOT IN COMPLIANCE.
11. BEFORE ANY EQUIPMENT IS ORDERED AND/OR INSTALLED, DETERMINE THAT SAID EQUIPMENT WILL PROPERLY FIT WITHIN THE SPACE ALLOCATED, THAT REQUIRED PIPING GRADES CAN BE MAINTAINED; AND THAT DUCTWORK CAN BE RUN AS INTENDED.
12. COORDINATE THE INSTALLATION OF MECHANICAL MATERIALS AND EQUIPMENT ABOVE AND BELOW CEILINGS, LIGHT FIXTURES, AND OTHER BUILDING COMPONENTS. ALL COMPONENTS SHALL BE LOCATED AS TIGHT TO STRUCTURE AS POSSIBLE. COORDINATE CEILING CAVITY SPACE CAREFULLY WITH ALL TRADES.
13. ALL MATERIALS AND EQUIPMENT SHALL BE NEW, FREE OF DEFECTS, AND INSTALLED IN ACCORDANCE WITH MANUFACTURER'S CURRENT PUBLISHED RECOMMENDATIONS.
14. CONTRACTOR SHALL PREPARE AND SUBMIT TO THE OWNER ELECTRONIC (PDF) OF ALL SHOP DRAWINGS AND DESCRIPTIVE EQUIPMENT DATA/SUBMITTALS REQUIRED FOR THE PROJECT. THE CONTRACTOR SHALL IDENTIFY ANY "LONG LEAD TIME" ITEMS WHICH MAY IMPACT THE OVERALL PROJECT SCHEDULE. ALL BIDS SHALL INCLUDE COSTS ASSOCIATED WITH THE PURCHASE AND DELIVERY OF EQUIPMENT TO MEET THE PROJECT SCHEDULE.
15. QUIET OPERATION AND VIBRATION: MECHANICAL EQUIPMENT PROVIDED UNDER THIS CONTRACT SHALL OPERATE UNDER ALL LOAD CONDITIONS WITHOUT NOISE OR VIBRATION.
16. KEEP A COMPLETE SET OF RECORD DOCUMENT PRINTS IN CUSTODY DURING ENTIRE PERIOD OF CONSTRUCTION AT THE CONSTRUCTION SITE. AT THE COMPLETION OF THE PROJECT, TURN THESE DRAWINGS OVER TO THE GENERAL CONTRACTOR FOR HIS SUBMISSION TO THE ARCHITECT.
17. THE CONTRACTOR FOR THIS WORK SHALL EXAMINE THE DRAWINGS AND SPECIFICATIONS FOR OTHER PARTS OF THE WORK, AND IF HEADROOM OR SPACE CONDITIONS APPEAR INADEQUATE OR IF ANY DISCREPANCIES OCCUR BETWEEN THE PLANS FOR HIS WORK AND THE PLANS FOR THE WORK OF OTHERS, HE SHALL REPORT SUCH DISCREPANCIES TO THE ARCHITECT/ENGINEER AND SHALL OBTAIN WRITTEN INSTRUCTIONS FOR ANY CHANGES NECESSARY TO ACCOMMODATE HIS WORK WITH THE WORK OF OTHERS. ANY CHANGES IN THE WORK COVERED BY THIS SPECIFICATION MADE NECESSARY BY THE FAILURE OR NEGLECT OF THE CONTRACTOR TO REPORT SUCH DISCREPANCIES SHALL BE MADE BY AND AT THE EXPENSE OF THIS CONTRACTOR.
18. OPERATING AND MAINTENANCE DATA; THE CONTRACTOR SHALL PREPARE AN OPERATING AND MAINTENANCE MANUAL COVERING ALL SYSTEMS AND EQUIPMENT INSTALLED UNDER THIS DIVISION. SUBMIT AN OUTLINE OF A PREVENTATIVE MAINTENANCE PROGRAM FOR EACH SYSTEM. CONTRACTOR SHALL PROPERLY LUBRICATE ALL MECHANICAL PIECES OF EQUIPMENT, WHICH HE HAS PROVIDED BEFORE TURNING THE BUILDING OVER TO THE OWNER.
19. WARRANTIES:
    a. PROVIDE COMPLETE WARRANTY INFORMATION FOR EACH ITEM, INCLUDING, NAME OF PRODUCT OR EQUIPMENT; DATE OF BEGINNING OF WARRANTY OR BOND; DURATION OF WARRANTY OR BOND; AND NAMES, ADDRESSES, AND TELEPHONE NUMBERS OF MANUFACTURING/SERVICING PERSONNEL, AS WELL AS, PROCEDURES FOR FILING A CLAIM AND OBTAINING WARRANTY SERVICES.
    b. THE CONTRACTOR SHALL WARRANT ALL MATERIALS, WORKMANSHIP AND THE SUCCESSFUL OPERATION OF ALL EQUIPMENT AS IDENTIFIED IN THE GENERAL CONDITIONS, OR DIVISION 1.
20. ANY FILTERS USED DURING CONSTRUCTION SHALL BE REPLACED WITH NEW FILTERS DURING FINAL CLEANUP.
21. RESPONSIBILITY OF CONTRACTOR; THE CONTRACTOR IS RESPONSIBLE FOR THE COMPLETE AND SATISFACTORY INSTALLATION OF THE WORK IN ACCORDANCE WITH THE TRUE INTENT OF THE DRAWINGS AND SPECIFICATIONS. HE SHALL PROVIDE, WITHOUT EXTRA CHARGE, ALL INCIDENTAL ITEMS REQUIRED, AS A PART OF HIS WORK. THE INSTALLATION SHALL BE SO MADE THAT ITS SEVERAL COMPONENT PARTS WILL FUNCTION TOGETHER AS A WORKABLE SYSTEM AND SHALL BE LEFT WITH ALL PARTS ADJUSTED AND IN WORKING ORDER.

B. PIPING APPLICATION:

2. ALL PIPING SHALL CONFORM TO APPLICABLE NATIONAL, STATE, AND LOCAL CODES.
3. REFER TO PIPING APPLICATOIN SCHEDULE FOR ADDITIONAL INFORMATION.

C. PIPING INSTALLATION:

1. GENERAL: INSTALL PIPES AND PIPE FITTINGS IN ACCORDANCE WITH RECOGNIZED INDUSTRY PRACTICES WHICH WILL ACHIEVE PERMANENTLY LEAK-PROOF PIPING SYSTEMS, CAPABLE OF PERFORMING EACH INDICATED SERVICE WITHOUT PIPING FAILURE. INSTALL EACH RUN WITH MINIMUM JOINTS AND COUPLINGS, BUT WITH ADEQUATE AND ACCESSIBLE UNIONS FOR DISASSEMBLY AND MAINTENANCE/REPLACEMENT OF VALVES AND EQUIPMENT.
2. SANITARY WASTE AND VENT; AND STORM DRAIN PIPING:
    a. VERIFY ALL INVERT ELEVATIONS OF EXISTING WASTE AND STORM DRAIN PIPING PRIOR TO ANY NEW WORK.
    b. INSTALL PLUMBING DRAINAGE PIPING WITH MINIMUM 1/4" PER FOOT (2%) DOWNWARD SLOPE IN DIRECTION OF DRAIN FOR PIPING 3" AND SMALLER. INSTALL 4" AND LARGER PIPING WITH MINIMUM 1/8" PER FOOT (1%) DOWNWARD SLOPE UNLESS OTHERWISE INDICATED ON DRAWINGS AND WHEN APPROVED BY ADMINISTRATIVE AUTHORITIES.
    c. GRADE VENT PIPING FOR PROPER VENTILATION (MINIMUM 1/8" PER FOOT) AND TO ALLOW PIPING TO FREE ITSELF QUICKLY OF CONDENSATION OF WATER.
3. CONTRACTOR SHALL FIELD VERIFY ALL PIPING AND PLUMBING LOCATIONS AND INVERTS PRIOR TO TRENCHING OR INSTALLATION OF NEW PIPING.
4. INSTALL HANGERS AND GUIDES AS NECESSARY TO PROVIDE PIPING SYSTEMS, WHICH ARE SELF SUPPORTING AND NOT DEPENDENT UPON CONNECTIONS TO EQUIPMENT. ALL PIPING SHALL BE ADEQUATELY SUPPORTED FROM THE BUILDING STRUCTURE WITH ADJUSTABLE HANGERS TO MAINTAIN UNIFORM GRADING WHERE REQUIRED AND TO PREVENT SAGGING AND POCKETING.
5. ALLOW FLEXIBILITY IN THE ERECTION OF THE PIPING SYSTEM IN ORDER TO PREVENT EXCESSIVE STRESSES IN MATERIALS AND JOINTS DUE TO THERMAL EXPANSION OR EQUIPMENT VIBRATION. PROVIDE SUFFICIENT SWING JOINTS, ANCHORS, EXPANSION LOOPS, EXPANSION JOINS AND/OR OTHER DEVICES AS NECESSARY AND INSTALL SO AS TO PERMIT FREE EXPANSION AND CONTRACTION WITHOUT CAUSING UNDUE STRESSES.
6. PROVIDE SHUTOFF VALVES AND UNIONS OR FLANGES TO ISOLATE EACH ITEM OF EQUIPMENT.
7. PROVIDE DIELECTRIC UNIONS AT ALL JUNCTIONS OF DISSIMILAR METALS.
8. PROVIDE SHEET METAL SHIELDS FOR PIPING 2" AND SMALLER (EXCEPT WHERE REQUIRED TO BE CLAMPED) AND CALCIUM SILICATE THERMAL INSERT WITH SHEET METAL SHIELDS FOR PIPING LARGER THAN 2" AND FOR ALL SIZES OF INSULATED PIPING REQUIRED TO BE CLAMPED.
9. PROVIDE ELECTROLYSIS ISOLATORS AT ALL HANGERS AND SUPPORTS FOR DOMESTIC WATER AND OTHER WATER LINES WHICH ARE NOT INSULATED.
10. TEST ALL PIPING SYSTEMS. CORRECT LEAKS BY REMAKING JOINTS. GIVE A MINIMUM OF TWENTY FOUR (24) HOURS NOTICE TO ENGINEER OF DATES WHEN ACCEPTANCE TEST WILL BE CONDUCTED.
11. ALL PIPING SHALL BE CLEANED AND FLUSHED PRIOR TO SERVICE.

D. MECHANICAL IDENTIFICATION:

1. LABEL ALL PIPING. PIPING SHALL BE IDENTIFIED WITH 2" HIGH TEXT LABELS AND 6" FLOW ARROWS.

E. WATER DISTRIBUTION SYSTEM (NOT POTABLE WATER ONLY):

1. INSTALL PRESSURE REDUCING VALVES TO LIMIT MAXIMUM PRESSURE AT PLUMBING FIXTURES TO 65 PSIG.

Ramirez, Johnson, & Associates
3301 Lawrence St. Ste 2
Denver, CO 80205
P: 720.598.0774

JUST ARCHITECTURE & DESIGN
PHONE: (720) 323-1493
email: kyle@justarchitectureanddesign.com
9815 Westbury Ct. Highlands Ranch, CO 80129

ANDREW T. ACKERMAN
REGISTERED
52554
09/27/2023
PROFESSIONAL ENGINEER
STATE OF COLORADO

STAMP

PROSPECT LAKE EQUIPMENT BUILDING

1313 E COSTILLA ST, COLORADO SPRINGS, CO

#	DATE	ISSUE
1	2/20/23	1ST PERMIT
2	9/27/23	2ND PERMIT
3		
4		
5		
6		

PROJECT NUMBER: 23-001
DRAWN BY: ATA
CHECKED BY: SKZ

ALL INSTRUMENTS OF SERVICE, ALL DESIGNS, IDEAS AND INFORMATION SHOWN ON THESE DRAWINGS ARE AND SHALL REMAIN THE PROPERTY OF JUST ARCHITECTURE & DESIGN, LTD, NO PART THEREOF SHALL BE COPIED, DISCLOSED TO OTHERS, OR USED IN CONNECTION WITH ANY PROJECT OTHER THAN THE SPECIFIC PROJECT FOR WHICH THEY HAVE BEEN PREPARED WITHOUT THE WRITTEN CONSENT OF JUST ARCHOTECTURE & DESIGN, LTD. VISUAL CONTACT WITH THESE DRAWINGS SHALL CONSTITUTE CONCLUSIVE EVIDENCE OF ACCEPTANCE OF THESE RESTRICTIONS

PLUMBING SPECIFICATIONS

P002

Released for Permit
10/06/2023 11:38:05 AM
Pikes Peak REGIONAL Building Department
shanen
PLUMBING
10/06/2023 11:35:38 AM
Pikes Peak REGIONAL Building Department
shanen
PLUMBING

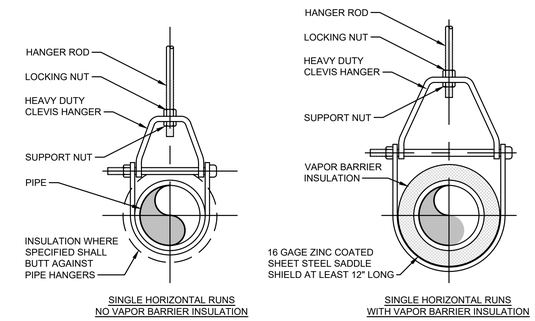

SINGLE HORIZONTAL RUNS NO VAPOR BARRIER INSULATION

SINGLE HORIZONTAL RUNS WITH VAPOR BARRIER INSULATION

HANGER ROD SCHEDULE			
PIPE SIZE	ROD SIZE	PIPE SIZE	ROD SIZE
UP TO 2"	3/8" DIA.	4" - 5"	5/8" DIA.
2 1/2 - 3"	1/2" DIA.	6" - 12"	7/8" DIA.

1 PIPE SUPPORT DETAIL

SCALE: NO SCALE

PLUMBING FIXTURE SCHEDULE

TAG	MANUFACTURER AND MODEL NUMBER	DESCRIPTION	CW	HW	W	V
HB-1	WOODFORD 65	FREEZEPROOF WALL HYDRANT WITH KEY OPERATION AND VACUUM BREAKER, COORDINATE STEM LENGTH WITH WALL THICKNESS.	3/4"	-	-	-

NOTES:
SIZES SHOWN ARE MINIMUM PIPE SIZES TO A SINGLE FIXTURE. MINIMUM PIPE SIZE TO 2 OR MORE FIXTURES IS 3/4". ALL FIXTURES LISTED ARE NOT NECESSARILY USED ON THIS PROJECT.

PIPING APPLICATION SCHEDULE

SERVICE	LOCATION	PIPE	FITTING	NOTES
DOMESTIC COLD WATER	INDOOR (ABOVE GRADE)	TYPE L OR TYPE M COPPER	WROUGHT COPPER SOLDER JOINT FITTINGS ASME B16.23	
SANITARY WASTE	BELOW GRADE	SOLID WALL PVC	PVC SOCKET FITTING ASTM D 2665	
SANITARY WASTE AND VENT	ABOVE GRADE	SOLID WALL PVC	PVC SOCKET FITTING ASTM D 2665	

Released for Permit
10/06/2023 11:38:05 AM
Pikes Peak REGIONAL Building Department
shanen
PLUMBING
10/06/2023 11:36:19 AM
Pikes Peak REGIONAL Building Department
shanen
PLUMBING

Ramirez, Johnson, & Associates
3301 Lawrence St. Ste 2
Denver, CO 80205
P: 720.598.0774

JUST ARCHITECTURE & DESIGN
PHONE: (720) 323-1493
email: kyle@justarchitectureanddesign.com
9815 Westbury Ct. Highlands Ranch, CO 80129

ANDREW T. ACHTERKLAN REGISTERED 52554 09/27/2023 PROFESSIONAL ENGINEER STATE OF COLORADO

STAMP

PROSPECT LAKE EQUIPMENT BUILDING

1313 E COSTILLA ST, COLORADO SPRINGS, CO

#	DATE	ISSUE
1	2/20/23	1ST PERMIT
2	9/27/23	2ND PERMIT
3		
4		
5		
6		

PROJECT NUMBER: 23-001
DRAWN BY: ATA
CHECKED BY: SKZ

ALL INSTRUMENTS OF SERVICE, ALL DESIGNS, IDEAS AND INFORMATION SHOWN ON THESE DRAWINGS ARE AND SHALL REMAIN THE PROPERTY OF JUST ARCHITECTURE & DESIGN, LTD. NO PART THEREOF SHALL BE COPIED, DISCLOSED TO OTHERS, OR USED IN CONNECTION WITH ANY PROJECT OTHER THAN THE SPECIFIC PROJECT FOR WHICH THEY HAVE BEEN PREPARED WITHOUT THE WRITTEN CONSENT OF JUST ARCHITECTURE & DESIGN, LTD. VISUAL CONTACT WITH THESE DRAWINGS SHALL CONSTITUTE CONCLUSIVE EVIDENCE OF ACCEPTANCE OF THESE RESTRICTIONS

DETAILS

P003

GENERAL NOTES

A. ALL WORK SHOWN SHALL COMPLY WITH ALL NATIONAL, STATE AND LOCAL CODES AND ORDINANCES.

B. REFERENCE ALL OTHER DRAWINGS AND SPECIFICATIONS FOR ADDITIONAL WORK OR CLARIFICATION OF NECESSARY WORK.

KEY NOTES (#)

1. 3/4" CW (NON-POTABLE) TO (E) IRRIGATION SYSTEM. SEE CIVIL FOR CONT. DIRECT BURY MIN 42" BFG. PROVIDE PERMANENT SIGN ADJACENT TO WALL HYDRANT READING: " NOTICE - NON-POTABLE WATER, DO NOT DRINK".

2. 3/4" CD (SIZE TO BE CONFIRMED WITH MFG) FOR OWNER PROVIDED AIR COMPRESSOR ROUTED THRU EXTERIOR WALL AND TERMINATING ABOVE GRADE. CONTRACTOR SHALL ENSURE CD DOES NOT TERMINATE ONTO A PUBLIC WALKWAY. PROVIDE MANUAL ISOLATION VALVE (NORMALLY OPEN) TO CLOSE OFF DRAIN DURING OFF SEASON.

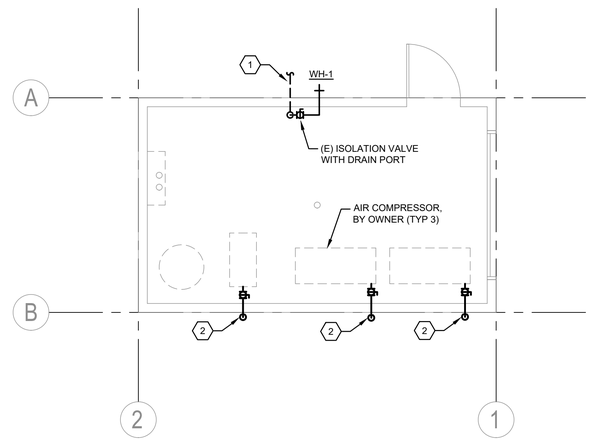

1 PLUMBING PLAN

SCALE: 1/4" = 1'-0"

Ramirez, Johnson, & Associates
3301 Lawrence St. Ste 2
Denver, CO 80205
P: 720.598.0774

JUST ARCHITECTURE & DESIGN
PHONE: (720) 323-1493
email: kyle@justarchitectureanddesign.com
9815 Westbury Ct. Highlands Ranch, CO 80129

ANDREW T. ACHTERKAN REGISTERED 52554 09/27/2023 PROFESSIONAL ENGINEER STATE OF COLORADO

STAMP

PROSPECT LAKE EQUIPMENT BUILDING

1313 E COSTILLA ST, COLORADO SPRINGS, CO

#	DATE	ISSUE
1	2/20/23	1ST PERMIT
2	9/27/23	2ND PERMIT
3		
4		
5		
6		

PROJECT NUMBER: 23-001
DRAWN BY: ATA
CHECKED BY: SKZ

ALL INSTRUMENTS OF SERVICE, ALL DESIGNS, IDEAS AND INFORMATION SHOWN ON THESE DRAWINGS ARE AND SHALL REMAIN THE PROPERTY OF JUST ARCHITECTURE & DESIGN, LTD. NO PART THEREOF SHALL BE COPIED, DISCLOSED TO OTHERS, OR USED IN CONNECTION WITH ANY PROJECT OTHER THAN THE SPECIFIC PROJECT FOR WHICH THEY HAVE BEEN PREPARED WITHOUT THE WRITTEN CONSENT OF JUST ARCHITECTURE & DESIGN, LTD. VISUAL CONTACT WITH THESE DRAWINGS SHALL CONSTITUTE CONCLUSIVE EVIDENCE OF ACCEPTANCE OF THESE RESTRICTIONS

PLUMBING PLAN

1 P101

Released for Permit
10/06/2023 11:38:05 AM
Pikes Peak REGIONAL Building Department
shanen
PLUMBING
10/06/2023 11:37:26 AM
Pikes Peak REGIONAL Building Department
shanen
PLUMBING

ELECTRICAL SYMBOLS

NOTE:

THIS IS A MASTER SYMBOLS LIST. ALL SYMBOLS, ABBREVIATIONS, ETC. MAY NOT NECESSARILY BE USED ON ALL DRAWINGS.

ONE LINE AND RISER

- PANEL XXX — PANEL
- CURRENT TRANSFORMER, RATED AS SPECIFIED OR REQUIRED
- M — MOTOR
- SPD — SURGE PROTECTION DEVICE
- GROUND CONNECTION
- 800A3P — SWITCH, RATING AS SHOWN
- 400A FRN — FUSE, FUSE AMPACITY AND TYPE AS SHOWN
- 800A3P — CIRCUIT BREAKER, RATING AS SHOWN
- M — UTILITY METER (AS REQUIRED BY UTILITY)
- SAFETY SWITCH, NON-FUSED, 240V, U.N.O.
- FUSED DISCONNECT
- COMBINATION STARTER/DISCONNECT (SIZE AS INDICATED)
- ENCLOSED CIRCUIT BREAKER
- T — T-XX — TRANSFORMER, TYPE AND RATING AS SHOWN
- CONDUIT CONNECTION
- G — CIRCUIT BREAKER WITH GROUND FAULT PROTECTION
- G — FUSE WITH GROUND FAULT PROTECTION
- GROUND CONNECTION WITH TEST WELL
- GROUND ROD
- WEATHER HEAD
- G — GENERATOR

MISCELLANEOUS

- X — KEY NOTE DESIGNATION
- X — SHORT CIRCUIT TAG DESIGNATION
- 1 — FEEDER TAG DESIGNATION
- X — REVISION NUMBER DESIGNATION
- NEW TO EXISTING CONNECTION
- NEW CONSTRUCTION
- EXISTING CONDITIONS
- DEMOLITION WORK

FIRE ALARM

- FACP — FIRE ALARM CONTROL PANEL
- FARA — FIRE ALARM REMOTE ANNUNCIATOR PANEL
- SMOKE DETECTOR, ADDRESSABLE PHOTO ELECTRIC
- CO — COMBINATION SMOKE AND CARBON MONOXIDE DETECTOR, ADDRESSABLE PHOTO ELECTRIC
- HD — HEAT DETECTOR
- DUCT SMOKE DETECTOR, ADDRESSABLE PHOTO ELECTRIC
- FIRE ADA ALARM STROBE MOUNTED AT 90" AFF OR 6" BELOW CEILING WHICHEVER IS LOWER
- FIRE ADA ALARM HORN MOUNTED AT 90" AFF OR 6" BELOW CEILING WHICHEVER IS LOWER
- FIRE ALARM AUDIBLE AND ADA STROBE LIGHT MOUNTED AT 90" AFF OR 6" BELOW CEILING, WHICHEVER IS LOWER
- F — FIRE ALARM MANUAL PULL STATION, ADDRESSABLE DOUBLE ACTION
- MAGNETIC DOOR HOLDER
- FS — FIRE ALARM FLOW SWITCH
- TS — FIRE ALARM TAMPER SWITCH

POWER

- PANELBOARD, ELECTRICAL DISTRIBUTION PANEL, OR LOAD CENTER SURFACE MOUNTED
- PANELBOARD, ELECTRICAL DISTRIBUTION PANEL, OR LOAD CENTER RECESS MOUNTED
- 20 AMP, 125V, NEMA 5-20R DUPLEX RECEPTACLE
- 20 AMP, 125V, NEMA 5-20R SIMPLEX RECEPTACLE
- 20 AMP, 125V, NEMA 5-20R QUAD RECEPTACLE
- 20 AMP, 125V, NEMA 5-20R GFCI RECEPTACLE
- 20 AMP, 125V, NEMA 5-20R GFCI DUPLEX RECEPTACLE , MOUNTED 6" ABOVE COUNTER AND/OR ABOVE BACKSPLASH, UNLESS OTHERWISE NOTED
- 20 AMP, 125V, NEMA 5-20R DUPLEX RECEPTACLE, MOUNTED 6" ABOVE COUNTER AND/OR ABOVE BACKSPLASH, UNLESS OTHERWISE NOTED
- 20 AMP, 125V, NEMA 5-20R SWITCHED DUPLEX RECEPTACLE
- 20 AMP, 125V, NEMA 5-20R CEILING MOUNTED DUPLEX RECEPTACLE
- 20 AMP, 125V, NEMA 5-20R CEILING MOUNTED SIMPLEX RECEPTACLE
- SPECIAL RECEPTACLE, CEILING MOUNTED, CONFIGURATION AS NOTED ON PLAN
- 20 AMP, 125V, NEMA 5-20R DUPLEX FLOOR RECEPTACLE, 3/4" CONDUIT RUN CONCEALED IN FLOOR SLAB
- 20 AMP, 125V, NEMA 5-20R QUAD FLOOR RECEPTACLE, 3/4" CONDUIT RUN CONCEALED IN FLOOR SLAB
- J — JUNCTION BOX, CEILING MOUNTED
- JUNCTION BOX, WALL MOUNTED
- JUNCTION BOX, FLOOR MOUNTED
- SPECIAL RECEPTACLE, WALL MOUNTED, CONFIGURATION AS NOTED ON PLAN
- FURNITURE FEED RECEPTACLE, WALL MOUNTED, CONFIGURATION AS NOTED ON PLAN
- M — MOTOR: HORSEPOWER AS INDICATED ON PLANS OR DIAGRAMS
- PLUGMOLD, REFER TO DRAWING FOR LENGTHS
- SAFETY SWITCH, NON-FUSED, 240V, U.N.O.
- FUSED DISCONNECT
- COMBINATION STARTER/DISCONNECT (SIZE AS INDICATED)
- ENCLOSED CIRCUIT BREAKER
- PHOTOCELL
- S — SINGLE POLE SWITCH; 3= THREE WAY SWITCH, 4= FOUR WAY SWITCH, K= KEY SWITCH, D= DIMMER SWITCH, T0= MOTOR RATED SWITCH, OS= OCCUPANCY SENSING, 3D= THREE WAY DIMMER SWITCH, T0= MOTOR RATED SWITCH.
- GROUND BAR
- R — RELAY
- EMERGENCY POWER OFF (EPO) PUSH BUTTON
- PP — POWER POLE

COMMUNICATIONS

- JUNCTION BOX FOR INSTALLATION OF COMMUNICATION OR DATA OUTLET, MOUNTED 18" AFF, UNLESS OTHERWISE NOTED. INSTALL 1" CONDUIT FROM BOX TO 3" INTO ACCESSIBLE LOCATION ABOVE FINISHED CEILING.
- FLOOR JUNCTION BOX FOR INSTALLATION OF COMMUNICATION OR DATA OUTLET. INSTALL 1" CONDUIT FROM BOX CONCEALED IN FLOOR SLAB TO WALL AND TO 3" INTO ACCESSIBLE LOCATION ABOVE FINISHED CEILING.
- JUNCTION BOX FOR INSTALLATION OF TV OUTLET. MOUNTED 18" AFF, UNLESS OTHERWISE NOTED. INSTALL 1" CONDUIT FROM BOX TO 3" INTO ACCESSIBLE LOCATION ABOVE FINISHED CEILING. COORDINATE MOUNTING HEIGHT WITH ARCHITECT PRIOR TO ROUGH-IN.
- S — SPEAKER, CEILING MOUNTED
- S — SPEAKER, WALL MOUNTED, 84" (CENTERLINE) A.F.F. OR 8" (CENTERLINE) BELOW CEILINGS THAT ARE 8'-0" OR LOWER, UNLESS NOTED OTHERWISE.
- S — HORN SPEAKER
- C — CLOCK, 84" (CENTERLINE) A.F.F. OR 8" (CENTERLINE) BELOW CEILINGS THAT ARE 8'-0" OR LOWER, UNLESS NOTED OTHERWISE.

CONDUIT DESIGNATIONS

- BRANCH CIRCUITS HOMERUN USE NUMBER 12 AWG WIRE, UNLESS OTHERWISE NOTED. ALL CIRCUITS SHALL CONTAIN A GROUND AND NEUTRAL CONDUCTOR, UNLESS NOTED OTHERWISE. CONTRACTOR SHALL PROVIDE MULTI-WIRE CIRCUIT HANDLE TIES AS FINAL FIELD INSTALLED WIRING REQUIRES.
- CONDUIT AND WIRE CONCEALED, 3/4" UNLESS OTHERWISE NOTED, CONDUIT USED FOR SWITCH LEGS, AND CONDUIT USED FOR CONTROL WIRING
- CONDUIT AND WIRE EMBEDDED IN CONCRETE OR BELOW GRADE
- CONDUIT TURNING DOWN
- CONDUIT TURNING UP

LIGHTING

NOTE: UPPER CASE LETTER DENOTES LUMINAIRE TYPE. LOWER CASE LETTER ADJACENT TO LUMINAIRE INDICATES SWITCH THAT CONTROLS LUMINAIRES

- A — 2' X 4' RECESSED LUMINAIRE, MOUNTING IS NOTED ON LUMINAIRE SCHEDULE, HATCHING DENOTES FIXTURE SHALL BE PROVIDED WITH EMERGENCY BATTERY BACKUP.
- A — 2' X 4' SURFACE MOUNTED LUMINAIRE, MOUNTING IS NOTED ON LUMINAIRE SCHEDULE, HATCHING DENOTES FIXTURE SHALL BE PROVIDED WITH EMERGENCY BATTERY BACKUP.
- A — 2' X 2' RECESSED LUMINAIRE, MOUNTING IS NOTED ON LUMINAIRE SCHEDULE, HATCHING DENOTES FIXTURE SHALL BE PROVIDED WITH EMERGENCY BATTERY BACKUP.
- A — 2' X 2' SURFACE MOUNTED LUMINAIRE, MOUNTING IS NOTED ON LUMINAIRE SCHEDULE, HATCHING DENOTES FIXTURE SHALL BE PROVIDED WITH EMERGENCY BATTERY BACKUP.
- A — 1' X 4' RECESSED LUMINAIRE, MOUNTING IS NOTED ON LUMINAIRE SCHEDULE, HATCHING DENOTES FIXTURE SHALL BE PROVIDED WITH EMERGENCY BATTERY BACKUP.
- A — 1' X 4' SURFACE MOUNTED LUMINAIRE, MOUNTING IS NOTED ON LUMINAIRE SCHEDULE, HATCHING DENOTES FIXTURE SHALL BE PROVIDED WITH EMERGENCY BATTERY BACKUP.
- A — 1' X 4' WALL MOUNTED LUMINAIRE, MOUNTING IS NOTED ON LUMINAIRE SCHEDULE, HATCHING DENOTES FIXTURE SHALL BE PROVIDED WITH EMERGENCY BATTERY BACKUP.
- A — LINEAR PENDANT LUMINAIRE, MOUNTING IS NOTED ON LUMINAIRE SCHEDULE, HATCHING DENOTES FIXTURE SHALL BE PROVIDED WITH EMERGENCY BATTERY BACKUP.
- A — PENDANT LUMINAIRE, MOUNTING IS NOTED ON LUMINAIRE SCHEDULE, HATCHING DENOTES FIXTURE SHALL BE PROVIDED WITH EMERGENCY BATTERY BACKUP.
- A — STRIP TYPE LUMINAIRE, LENGTHS AS NOTED ON LUMINAIRE SCHEDULE, HATCHING DENOTES FIXTURE SHALL BE PROVIDED WITH EMERGENCY BATTERY BACKUP.
- A — SURFACE MOUNTED DOWNLIGHT, MOUNTING IS NOTED ON LUMINAIRE SCHEDULE, HATCHING DENOTES FIXTURE SHALL BE PROVIDED WITH EMERGENCY BATTERY BACKUP.
- A — RECESSED MOUNTED DOWNLIGHT, MOUNTING IS NOTED ON LUMINAIRE SCHEDULE, HATCHING DENOTES FIXTURE SHALL BE PROVIDED WITH EMERGENCY BATTERY BACKUP.
- A — WALL MOUNTED LUMINAIRE, MOUNTING IS NOTED ON LUMINAIRE SCHEDULE, HATCHING DENOTES FIXTURE SHALL BE PROVIDED WITH EMERGENCY BATTERY BACKUP.
- A — WALL WASH LUMINAIRE, MOUNTING IS NOTED ON LUMINAIRE SCHEDULE, HATCHING DENOTES FIXTURE SHALL BE PROVIDED WITH EMERGENCY BATTERY BACKUP.
- A — RECESSED STEP LIGHT LUMINAIRE, MOUNTING IS NOTED ON LUMINAIRE SCHEDULE, HATCHING DENOTES FIXTURE SHALL BE PROVIDED WITH EMERGENCY BATTERY BACKUP.
- A — TRACK LUMINAIRE, MOUNTING IS NOTED ON LUMINAIRE SCHEDULE
- A A A — CEILING MOUNTED EXIT SIGN. PROVIDE DIRECTIONAL ARROWS AS REQUIRED
- A — EMERGENCY BATTERY LUMINAIRE (2 HEAD) 84" AFF, UNLESS OTHERWISE NOTED, LETTER DENOTES LUMINAIRE TYPE.
- A — EMERGENCY BATTERY LUMINAIRE (2 HEAD) WITH MOUNTED EXIT SIGN. PROVIDE DIRECTIONAL ARROWS AS REQUIRED MOUNT AT 84" AFF, UNLESS OTHERWISE NOTED. LETTER DENOTES LUMINAIRE TYPE.
- A A — WALL MOUNTED EXIT SIGN. PROVIDE DIRECTIONAL ARROWS AS REQUIRED
- A — SINGLE POLE MOUNTED, EXTERIOR LUMINAIRE
- A — DOUBLE POLE MOUNTED, EXTERIOR LUMINAIRE
- A — QUAD POLE MOUNTED, EXTERIOR LUMINAIRE
- A — BOLLARD LUMINAIRE
- A — CEILING FAN
- S — SINGLE POLE SWITCH; 3= THREE WAY SWITCH, 4= FOUR WAY SWITCH, K= KEY SWITCH, D= DIMMER SWITCH, FAN= CEILING FAN SWITCH, TO= MOTOR RATED SWITCH, 3D= THREE WAY DIMMER SWITCH, P= PILOT LIGHT, OS= OCCUPANCY SENSOR; LOWER CASE LETTER INDICATES LUMINAIRES CONTROLLED
- SS — DUAL LEVEL SWITCH
- OS — CEILING MOUNTED OCCUPANCY SENSOR
- PHOTOCELL
- TC — WALL MOUNTED TIMECLOCK

STANDARD MOUNTING HEIGHT U.N.O.

ARCHITECTURAL DRAWINGS SHALL TAKE PRECEDENCE OVER MOUNTING HEIGHTS INDICATED ON ELECTRICAL DRAWINGS.

RECEPTACLES (CENTERLINE)	18"
RECEPTACLES IN EQUIP. RMS.	48"
RECEPTACLES (EXTERIOR)	24"
RECEPTACLES (GARAGES)	24"
ALARMS, SWITCHES AND CONTROLS (CENTERLINE)	48"
TELEPHONE (PUBLIC)	1@48" AND 1@36"
TELEPHONE OUTLETS (CENTERLINE)	18"
TELEPHONE TERMINAL BOARD (BTM.)	6"
SAFETY SWITCHES	48"
STARTERS	48"
PANELS (TOP)	72"
CLOCK OUTLETS (CENTERLINE)	90"
FIRE ALARM PULL STATIONS (HANDLE)	44"
STROBES (CENTERLINE)	80"*
FIRE ALARM BELLS (EXTERIOR)	12'-0"
CONTROLS (FIRE ALARM CONTROL PANEL)	48"
ANNUNCIATION PANELS	48"
INTERCOM (AFEA ONLY)	36"
REMOTE INDICATING LIGHT (EQUIP. RMS.)	48"
REMOTE INDICATING LIGHT (FIN. AREAS)	CEILING
EXIT SIGNS (WALL MOUNTED BTM.)	80"
TELEVISION OUTLETS	18"
INTERCOMS	48"
PHOTOCELLS	12'-0"

ABBREVIATIONS

A	AMPS, AIR (COMPRESSED)
AC	ABOVE COUNTER
AFC	ABOVE FINISHED CEILING
AFEA	AREA FOR EVACUATION ASSISTANCE
AFF	ABOVE FINISHED FLOOR
AFG	ABOVE FINISHED GRADE
AHU	AIR HANDLING UNIT
AIC	AMPERE INTERRUPTING CURRENT
AL	ALUMINUM
ATS	AUTOMATIC TRANSFER SWITCH
AWG	AMERICAN WIRE GAUGE
AV	FOR AUDIO VISUAL MEDIA CABINET
BFF	BELOW FINISHED FLOOR
BKR	BREAKER
BOS	BOTTOM OF STRUCTURE
BTU	BRITISH THERMAL UNIT
C	CONDUIT
CATV	CABLE TELEVISION SYSTEM
CCTV	CLOSED CIRCUIT TELEVISION
CFM	CUBIC FEET PER MINUTE
CKT	CIRCUIT
CLG	CEILING
CM	COFFEE MAKER
CU	COPPER, CONDENSING UNIT
(D)	DEMOLISH
DDC	DIRECT DIGITAL CONTROL
DISC	DISCONNECT
DN	DOWN
DPDT	DOUBLE POLE, DOUBLE THROW
DPST	DOUBLE POLE, SINGLE THROW
DW	DISHWASHER
DX	DIRECT EXPANSION
(E)	EXISTING TO REMAIN
EPO	EMERGENCY POWER OFF
FBO	FURNISHED BY OTHERS
FF	FINISHED FLOOR
FHC	FIRE HOSE CABINET
FLA	FULL LOAD AMPS
FLR	FLOOR
FVNR	FULL VOLTAGE, NON REVERSING
GD	GARBAGE DISPOSAL
GFI	GROUND FAULT CIRCUIT INTERRUPTER (PERSONAL PROTECTION ON DEVICE)
GFP	GROUND FAULT PROTECTED FROM UPSTREAM GFI RECEPTACLE OR CIRCUIT BREAKER
GFR	GROUND FAULT RELAY
GND	GROUND
HOA	HAND OFF AUTOMATIC
HPS	HIGH PRESSURE SODIUM
HSTAT	HUMIDISTAT
HTG	HEATING
HTR	HEATER
IG	ISOLATED GROUND
KCMIL	1000 CIRCULAR MILS
KV	KILOVOLT
KVA	KILOVOLT AMPS
KVAR	KILOVOLT AMPS REACTIVE
KW	KILOWATT
KWH	KILOWATT HOUR
LF	LINEAR FEET
LRA	LOCKED ROTOR AMPS
MATV	MASTER ANTENNA TELEVISION SYSTEM
MBH	1000 BTU PER HOUR
MCA	MINIMUM CIRCUIT AMPACITY
MCB	MAIN CIRCUIT BREAKER
MCC	MOTOR CONTROL CENTER
MD	MOTORIZED DAMPER
MDP	MAIN DISTRIBUTION PANEL
MFR	MANUFACTURER
MG	MOTOR GENERATOR
MH	MANHOLE
MSB	MAIN SWITCHBOARD
MTD	MOUNTED
MW	MICROWAVE
N/A	NOT APPLICABLE
N/C	NOT IN CONTRACT
N/O	NORMALLY OPEN
N/C	NORMALLY CLOSED
N/L	NIGHT LIGHT
OC	ON CENTER
OV	OVEN
PC	PHOTOCELL
PH,Ø	PHASE
PIV	POST INDICATOR VALVE
PJ	MOUNTED ON CEILING FOR PROJECTOR
PNL	PANEL
PT	POTENTIAL TRANSFORMER
QTY	QUANTITY
(RL)	RELOCATE
RA	RETURN AIR
RCP	REFLECTED CEILING PLAN
REF	REFRIGERATOR
REV	REVISION
RH	RELATIVE HUMIDITY
RLA	RUNNING LOAD AMPS
RPM	REVOLUTIONS PER MINUTE
SA	SUPPLY AIR
SD	SMOKE DETECTOR
SF	SQUARE FEET
SPDT	SINGLE POLE, DOUBLE THROW
SPST	SINGLE POLE, SINGLE THROW
SP	STATIC PRESSURE
STO	SHORT TOGGLE OPERATOR
SWBD	SWITCHBOARD
TSTAT	THERMOSTAT
TL	TWISTLOCK
TV	TELEVISION
TYP	TYPICAL
U/F	UNDERFLOOR
U/G	UNDERGROUND
U/S	UNDER SLAB
UL	UNDERWRITERS LABORATORIES, INC.
UNO	UNLESS NOTED OTHERWISE
UPS	UNINTERRUPTIBLE POWER SUPPLY
VAC	VOLTS ALTERNATING CURRENT, VACUUM
VAV	VARIABLE AIR VOLUME
VM	VENDING MACHINE
W/	WITH
W/O	WITHOUT
WP	WEATHERPROOF
WT	WATERTIGHT, WEIGHT
XFMR	TRANSFORMER
XP	EXPLOSION PROOF

ELECTRICAL GENERAL NOTES

1. DO NOT SCALE DRAWINGS. VERIFY DIMENSIONS ON ARCHITECTURAL DRAWINGS AND IN FIELD PRIOR TO COMMENCEMENT OF WORK. REFER TO MECHANICAL PLANS FOR LOCATION OF ALL MECHANICAL EQUIPMENT. REVIEW ARCHITECTURAL, STRUCTURAL, MECHANICAL AND OTHER DRAWINGS PRIOR TO BID. COORDINATE ELECTRICAL WORK REQUIRED BY OTHER DISCIPLINES.
2. PROVIDE ELECTRICAL DEMOLITION REQUIRED. REFER TO ARCHITECTURAL DEMOLITION DRAWINGS FOR LOCATION AND EXTENT OF DEMOLITION REQUIRED. CONTRACTOR SHALL VISIT SITE PRIOR TO BID TO DETERMINE EXTENT OF WORK INVOLVED. PROVIDE LABOR AND MATERIALS AS REQUIRED TO MAINTAIN AND/OR RESTORE CONTINUITY OF SERVICE TO EXISTING CIRCUITS.
3. FIELD VERIFY EXISTING EQUIPMENT OR CIRCUITS THAT ARE REMAINING TO BE RECONNECTED TO NEW OR EXISTING SWITCHBOARDS/PANELBOARDS. PROVIDE SWITCHES, RECEPTACLES, CONDUIT, WIRE, ETC. AS REQUIRED TO RESTORE CONTINUITY OF CIRCUITS.
4. PROVIDE ALL DEMOLITION REQUIRED TO REMOVE EXISTING UNUSED CONDUIT, WIRE, CABLE, J-BOXES, RECEPTACLES, SWITCHES, LIGHTS, FIRE ALARM DEVICES, ETC. COMPLETE WITH ASSOCIATED CIRCUITING TO SOURCE OR NEAREST ACTIVE DEVICE. WHERE IT IS NOT FEASIBLE TO REMOVE THE ABOVE AND WITH PERMISSION FROM THE OWNER, OUTLET SHALL BE ABANDONED, WIRE REMOVED AND BLANK COVER PLATES PROVIDED. IN ALL CONDUIT ABANDONED IN PLACE INSTALL A PULL STRING LABELED AT BOTH ENDS.
5. CONTRACTOR SHALL MAKE ALL FINAL CONNECTIONS TO EQUIPMENT. FINAL CONNECTIONS TO EQUIPMENT SHALL BE IN ACCORDANCE WITH MANUFACTURER'S APPROVED WIRING DIAGRAMS, DETAILS, AND INSTRUCTIONS. COORDINATE EQUIPMENT CONNECTION REQUIREMENTS WITH DIVISION 22 AND 23 CONTRACTOR. CONTRACTOR SHALL PROVIDE MATERIALS AND EQUIPMENT COMPATIBLE WITH EQUIPMENT SUPPLIED.
6. COORDINATE EQUIPMENT SIZES WITH ROOM SIZES. CONTRACTOR SHALL VERIFY THAT ELECTRICAL EQUIPMENT ORDERED CAN BE INSTALLED IN THE SPACE PROVIDED WHILE MAINTAINING CODE REQUIRED CLEARANCES.
7. EXISTING SYSTEMS AND CONDITIONS SHOWN ON DRAWINGS FOR EXISTING BUILDINGS ARE TO BE NOTED "FOR GUIDANCE ONLY". THE ELECTRICAL CONTRACTOR SHALL FIELD VERIFY ALL EXISTING CONDITIONS PRIOR TO BIDDING AND TO INCLUDE IN HIS BID AN ALLOWANCE FOR REMOVAL AND/OR RELOCATION OF EXISTING CONDUITS, WIRES, DEVICES, FIXTURES, OR OTHER EQUIPMENT AS INDICATED ON THE PLANS OR AS REQUIRED TO COORDINATE AND ADAPT NEW AND EXISTING ELECTRICAL SYSTEM TO ALL OTHER WORK.
8. SYSTEM OUTAGES SHALL BE PERMITTED ONLY AT TIMES APPROVED BY OWNER IN WRITING. WORK WHICH COULD RESULT IN AN ACCIDENTAL OUTAGE SHALL BE PERFORMED WITH THE OWNER'S MAINTENANCE PERSONNEL ADVISED OF SUCH WORK.
9. REVIEW ARCHITECTURAL, STRUCTURAL, AND MECHANICAL DRAWINGS AND REPORT ANY DISCREPANCIES TO THE ARCHITECT PRIOR TO STARTING WORK IN THESE AREAS.
10. WORK SHALL BE PERFORMED IN A WORKMANLIKE MANNER TO THE SATISFACTION OF THE ARCHITECT.
11. WORK, MATERIALS, AND EQUIPMENT SHALL CONFORM TO THE LATEST EDITIONS OF LOCAL, STATE, AND NATIONAL CODES AND ORDINANCES. COORDINATE WORK WITH LOCAL FIRE DEPARTMENT.
12. PROVIDE PERMITS AND INSPECTIONS REQUIRED.
13. SYSTEMS SHALL BE TESTED FOR PROPER OPERATION. IF TESTS SHOW THAT WORK IS DEFECTIVE, CONTRACTOR SHALL MAKE CORRECTIONS NECESSARY AT NO COST TO OWNER.
14. WIRE SHALL BE COPPER, 60 DEGREES C RATED UP TO 30 AMPS AND 75 DEGREES C RATED ABOVE 30 AMPS. SIZES INDICATED ARE FOR INSTALLATION IN A MAXIMUM 30 DEGREES C AMBIENT. CONDUCTOR AMPACITY SHALL BE DERATED FOR HIGHER AMBIENT INSTALLATIONS.
15. PROVIDE SHOP DRAWINGS AND/OR SUBMITTALS FOR ITEMS NOTED IN THE SPECIFICATIONS. SHOP DRAWINGS NOT REQUIRED BY THE SPECIFICATIONS WILL NOT BE REVIEWED.
16. CONTRACTOR SHALL BE RESPONSIBLE FOR REPLACING EQUIPMENT WHICH IS DAMAGED DUE TO INCORRECT FIELD WIRING PROVIDED UNDER THIS SECTION, OR FACTORY WIRING IN EQUIPMENT PROVIDED UNDER THIS SECTION.
17. CONTRACTOR'S FAILURE TO ORDER OR RELEASE ORDER FOR MATERIALS AND/OR EQUIPMENT WILL NOT BE ACCEPTED AS A REASON TO SUBSTITUTE ALTERNATE MATERIALS, EQUIPMENT, OR INSTALLATION METHODS.
18. SYSTEMS SHALL BE COMPLETE, OPERABLE, AND READY FOR CONTINUOUS OPERATION. LIGHTS, SWITCHES, RECEPTACLES, MOTORS, ETC. SHALL BE CONNECTED AND OPERABLE.
19. NEW RECESSED FIXTURES INSTALLED INDOORS SHALL BE THERMALLY PROTECTED.
20. PROVIDE NEW TYPED UPDATED PANELBOARD DIRECTORIES FOR EXISTING AND NEW CIRCUITS BEING UTILIZED FOR COMPLETION OF PROJECT.
21. CONDUITS PENETRATING THROUGH ROOF SHALL HAVE ROOF FLASHING WITH CAULK TYPE COUNTER FLASHING SLEEVE. INSTALLATION SHALL BE WATERTIGHT.
22. FINAL CONNECTIONS TO MOTORS, TRANSFORMERS AND OTHER VIBRATING EQUIPMENT SHALL BE MADE WITH LIQUID TIGHT FLEXIBLE CONDUIT AND APPROVED FITTINGS. DO NOT SECURE CONDUITS, DISCONNECTS, OR DEVICES TO DUCTWORK OR MECHANICAL EQUIPMENT. PROVIDE VIBRATION ISOLATION PADS FOR ALL TRANSFORMERS AND MOTORS.
23. WHERE PANELS ARE INSTALLED FLUSH WITH WALLS, EMPTY CONDUITS SHALL BE EXTENDED FROM THE PANEL TO AN ACCESSIBLE SPACE ABOVE OR BELOW. A MINIMUM OF ONE 3/4" CONDUIT SHALL BE INSTALLED FOR EVERY THREE SINGLE POLE SPARE CIRCUIT BREAKERS OR SPACES, OR FRACTION THEREOF, BUT NOT LESS THAN TWO CONDUITS.
24. WIRE TERMINATION PROVISIONS FOR PANELBOARDS, CIRCUIT BREAKERS, SAFETY SWITCHES, AND ALL OTHER ELECTRICAL APPARATUS SHALL BE LISTED AS 75 DEGREES C.
25. ALL ELECTRICAL SYSTEMS COMPONENTS SHALL BE LISTED BY UL.
26. IF REQUIRED, FIRE ALARM SYSTEM SHALL BE DESIGNED AND SUBMITTED AS DELEGATED DESIGN SUBMITTAL. PROVIDE SYSTEM DEVICES, CONDUIT, WIRES, AND CABLE AS DIRECTED BY EQUIPMENT MANUFACTURER. MATERIALS, EQUIPMENT, AND WORKMANSHIP SHALL MEET PREVAILING CODES. THE SYSTEM SHALL BE COMPLETE AND OPERABLE IN EVERY RESPECT. SUBMIT SHOP DRAWINGS ACCORDING TO SPECIFICATIONS. SHOP DRAWINGS SHALL INCLUDE A SINGLE LINE DIAGRAM THAT SHOWS DEVICES, CONDUIT, WIRE, CABLE SIZES AND EQUIPMENT TO BE USED. SHOP DRAWINGS SHALL BE STAMPED AND SIGNED BY A REGISTERED ENGINEER PROVIDED BY THE FIRE ALARM VENDOR. SYSTEM CALIBRATION AND TESTING SHALL BE BY FACTORY CERTIFIED TECHNICIAN.
27. BACK-TO-BACK OUTLETS IN THE SAME WALL, OR "THRU-WALL" TYPE BOXES SHALL NOT BE PERMITTED. PROVIDE 24-INCH SEPARATION TO OFFSET OUTLETS SHOWN ON OPPOSITE SIDES OF A COMMON WALL TO MINIMIZE SOUND TRANSMISSION. COVER BACKBOXES WITH EITHER FIRE OR SOUND PUTTY PAD.
28. OUTLET BOXES ON OPPOSITE SIDES OF FIRE-RATED WALLS AND PARTITIONS SHALL BE SEPARATED BY A HORIZONTAL DISTANCE OF AT LEAST 24 INCHES.
29. PROVIDE TAMPER-RESISTANT RECEPTACLES PER NEC 406.12 FOR ALL CHILD CARE AND EDUCATION FACILITIES, GUEST ROOMS, WAITING/OFFICE/CORRIDORS IN CLINIC, AND ASSEMBLY AREAS OCCUPIED BY CHILDREN. CONFIRM REQUIREMENTS WITH AHJ.
30. BRANCH CIRCUIT CONDUCTORS SHALL BE SIZED TO PREVENT A VOLTAGE DROP EXCEEDING 3%.

CODE SUMMARY

REGIONAL BUILDING CODE	2017 RBC
BUILDING	2015 IBC
FIRE	2015 IFC
MECHANICAL	2015 IMC
FUEL GAS	2015 IFGC
PLUMBING	2018 IPC
ENERGY CONSERVATION	2015 IECC
ELECTRICAL	2020 NEC

Ramirez, Johnson, & Associates
3301 Lawrence St. Ste 2
Denver, CO 80205
P: 720.598.0774

Released for Permit
08/01/2023 4:53:32 PM
Pikes Peak Regional Building Department
Shelby
ELECTRICAL

JUST ARCHITECTURE & DESIGN
PHONE: (720) 323-1493
email: kyle@justarchitectureanddesign.com
9815 Westbury Ct. Highlands Ranch, CO 80129

COLORADO LICENSED
THERESA W. GRAY
41315
02/17/2023
PROFESSIONAL ENGINEER

STAMP

PROSPECT LAKE EQUIPMENT BUILDING

PROSPECT LAKE, COLORADO SPRINGS, CO

#	DATE	ISSUE
1	2-20-23	1ST PERMIT
2		
3		
4		
5		
6		

PROJECT NUMBER: 23-001
DRAWN BY: SCA
CHECKED BY: TWG

ALL INSTRUMENTS OF SERVICE, ALL DESIGNS, IDEAS AND INFORMATION SHOWN ON THESE DRAWINGS ARE AND SHALL REMAIN THE PROPERTY OF JUST ARCHITECTURE & DESIGN, LTD. NO PART THEREOF SHALL BE COPIED, DISCLOSED TO OTHERS, OR USED IN CONNECTION WITH ANY PROJECT OTHER THAN THE SPECIFIC PROJECT FOR WHICH THEY HAVE BEEN PREPARED WITHOUT THE WRITTEN CONSENT OF JUST ARCHITECTURE & DESIGN, LTD. VISUAL CONTACT WITH THESE DRAWINGS SHALL CONSTITUTE CONCLUSIVE EVIDENCE OF ACCEPTANCE OF THESE RESTRICTIONS.

ELECTRICAL LEGEND

E001

PART I - GENERAL

1.01 GENERAL PROJECT REQUIREMENTS

A. ALL DRAWINGS AND GENERAL PROVISIONS OF CONTRACT, INCLUDING DIVISION 1 SPECIFICATION SECTIONS AND GENERAL AND SUPPLEMENTARY CONDITIONS, SHALL APPLY TO THIS SECTION.

B. RELATED DOCUMENTS: ARCHITECTURAL SPECIFICATIONS, LIGHTING FIXTURE SPECIFICATIONS INCLUDED IN OTHERS' DOCUMENTS, GENERAL, SPECIAL AND SUPPLEMENTARY CONDITIONS, AND SIMILAR DOCUMENTS SHALL FORM A PART OF THESE SPECIFICATIONS.

C. SCOPE OF WORK: PROVIDE ALL REQUIRED LABOR, MATERIALS, EQUIPMENT AND CONTRACTOR'S SERVICES NECESSARY FOR COMPLETE AND SAFE INSTALLATION OF ELECTRICAL WORK IN CONFORMITY WITH REQUIREMENTS OF ALL AUTHORITIES HAVING JURISDICTION, AS INDICATED ON DRAWINGS AND/OR DESCRIBED IN THESE SPECIFICATIONS.

D. SITE CLEANLINESS: KEEP SITE FREE FROM SURPLUS MATERIAL, TOOLS, AND RUBBISH AT ALL TIMES DURING CONSTRUCTION PERIOD AND, UPON COMPLETION, LEAVE SITE IN CLEAN CONDITION.

E. DAMAGE: REPAIR ANY DAMAGE CAUSED TO WORK OF OTHER TRADES AND ANY OTHER DAMAGE CAUSED BY THIS SECTION TO INTENDED/ORIGINAL CONDITION.

F. PASSAGE OF EQUIPMENT: CHECK THE DIMENSIONS OF EQUIPMENT OF THIS SECTION TO ENSURE THAT SUCH EQUIPMENT CAN PASS THROUGH THE NECESSARY AREAS TO REACH ITS ULTIMATE INSTALLED LOCATION. INCLUDE IN BID COSTS FOR ALL WORK REQUIRED, INCLUDING ANY WORK REQUIRED TO MOVE THE EQUIPMENT THROUGH THE SITE TO THIS FINAL LOCATION AND ANY DISMANTLING/RE-ASSEMBLY.

G. GUARANTEE: CONTRACTOR SHALL GUARANTEE THAT ALL PORTIONS OF THE WORK ARE IN ACCORDANCE WITH CONTRACT REQUIREMENTS. GUARANTEE ALL WORK AGAINST FAULTY AND IMPROPER MATERIAL AND WORKMANSHIP FOR A MINIMUM PERIOD OF ONE YEAR FROM DATE OF FINAL ACCEPTANCE BY OWNER. IF GUARANTEES OR WARRANTIES FOR LONGER TERMS ARE SPECIFIED BY CONTRACT, SUCH LONGER TERM SHALL APPLY.

H. PERMITS AND INSPECTIONS: CONTRACTOR SHALL SECURE ALL APPROVALS AND PAY ALL FEES FOR WORK INSTALLED AND DELIVER CERTIFICATE TO OWNER. INCLUDE ALL COSTS IN BASE BID.

I. PRIOR TO SUBMITTING BID, CONTRACTOR SHALL VERIFY ALLOWABLE WORKING HOURS, EMPLOYEE PARKING AREAS, MATERIAL DELIVERY AND STORAGE REQUIREMENTS, AND REQUIREMENTS FOR DEMOLITION AND REMOVAL OF CONSTRUCTION DEBRIS (IF ANY). INCLUDE ALL COSTS IN BID FOR DUST BARRIERS AND DUMPSTERS FOR THE DURATION OF THE PROJECT AS REQUIRED.

J. DURING PREPARATION OF BID, CONTRACTOR MAY DISCOVER ERRORS IN THESE DOCUMENTS OR DISCREPANCIES BETWEEN THESE DOCUMENTS AND THOSE OF OTHER TRADES. IN CASE OF DISCREPANCIES, CONTRACTOR IS RESPONSIBLE FOR BIDDING THE GREATER QUANTITY OR HIGHER QUALITY ITEMS IF NO SUFFICIENT RESOLUTION OF THE DISCREPANCY IS DETERMINED PRIOR TO SUBMITTING BID.

K. RECORD DRAWINGS: UPON PROJECT COMPLETION, DELIVER TO OWNER ONE SET OF REPRODUCIBLE DRAWINGS AND ONE BOUND SET OF BLUEPRINTS AND PANEL SCHEDULES SHOWING ALL WORK AS ACTUALLY INSTALLED.

1.02 DEFINITIONS AND TERMINOLOGY

A. DRAWINGS AND SPECIFICATIONS ARE OF SIMPLIFIED FORM AND INCLUDE INCOMPLETE SENTENCES. WORDS OR PHRASES SUCH AS "THE CONTRACTOR SHALL", "SHALL BE", "FURNISH", "PROVIDE", "A", "AN", "THE" AND "ALL" MAY BE OMITTED FOR BREVITY.

B. WORDS AND/OR PHRASES USED IN THESE DOCUMENTS ARE DEFINED AS FOLLOWS:
1. "FURNISH" OR "PROVIDE": TO SUPPLY, INSTALL, AND CONNECT COMPLETELY AND READY FOR SAFE AND REGULAR OPERATION OF PARTICULAR WORK REFERRED TO UNLESS SPECIFICALLY NOTED OTHERWISE.
2. "INSTALL": TO ERECT, MOUNT, AND CONNECT COMPLETE WITH ANY NECESSARY RELATED ACCESSORIES (WHETHER SPECIFICALLY INDICATED OR NOT).
3. "SUPPLY": TO PURCHASE, PROCURE, ACQUIRE, AND DELIVER COMPLETE WITH ANY NECESSARY RELATED ACCESSORIES.
4. "WORK": LABOR, MATERIALS, EQUIPMENT, AND ACCESSORIES,AND OTHER ITEMS REQUIRED FOR PROPER AND COMPLETE INSTALLATION.
5. "CONTRACTOR": ELECTRICAL CONTRACTOR, UNLESS NOTED OTHERWISE.
6. "PROJECT MANAGER": THE ENTITY/PROFESSIONAL RESPONSIBLE FOR COORDINATION AND COMPLETION OF ALL REQUIRED CONSTRUCTION WORK FOR THIS PROJECT (THE GENERAL CONTRACTOR OR ARCHITECT OR OTHER AUTHORITY AS DESCRIBED IN THE CONTRACT).
7. "OWNER": THE OWNER OR TENANT THAT IS THE ULTIMATE RECIPIENT OF THE CONSTRUCTION WORK PERFORMED.
8. "WIRING": RACEWAY, FITTINGS, CONDUCTORS, BOXES, AND RELATED ITEMS.
9. "CONCEALED": INSTALLED EMBEDDED IN MASONRY OR OTHER CONSTRUCTION, IN FURRED SPACES, WITHIN DOUBLE PARTITIONS OR HUNG CEILINGS, IN TRENCHES, IN CRAWL SPACES, IN ENCLOSURES, OR AS DEFINED IN NEC ARTICLE 100.
10."EXPOSED": NOT INSTALLED UNDERGROUND OR "CONCEALED" AS DEFINED ABOVE, OR AS DEFINED IN NEC ARTICLE 100.
11."EQUAL": ACCEPTABLE EQUIVALENT IN MATERIALS, WEIGHT, SIZE, DESIGN, OPERATION, AND EFFICIENCY OF SPECIFIED PRODUCT. FINAL DETERMINATION OF ACCEPTABLE EQUIVALENCY SHALL BE MADE BY ENGINEER WHEN AN ITEM IS INDICATED AS "APPROVED EQUAL".

C. WHERE TERMS ARE NOT DEFINED IN THESE DOCUMENTS, THE DEFINITIONS IN NEC ARTICLE 100 SHALL TAKE PRECEDENCE.

1.03 REFERENCE STANDARDS

A. COMPLY WITH ALL PUBLISHED CODES, SPECIFICATIONS, STANDARDS, TESTS, OR RECOMMENDED METHODS OF TRADE, INDUSTRY OR GOVERNMENTAL ORGANIZATIONS, OR LOCAL UTILITIES AS THEY APPLY TO WORK IN THIS DIVISION AS OUTLINED BELOW:
1. ADA - AMERICANS WITH DISABILITIES ACT.
2. ANSI - AMERICAN NATIONAL STANDARDS INSTITUTE.
3. ASTM - AMERICAN SOCIETY OF TESTING AND MATERIALS.
4. CBM - CERTIFIED BALLAST MANUFACTURERS.
5. ETL - ELECTRICAL TESTING LABORATORIES.
6. FAA - FEDERAL AVIATION ADMINISTRATION.
7. FCC - FEDERAL COMMUNICATIONS COMMISSION.
8. FM - FACTORY MUTUAL.
9. IEEE - INSTITUTE OF ELECTRICAL AND ELECTRONICS ENGINEERS.
10.IES - ILLUMINATING ENGINEERING SOCIETY.
11.NEC - NATIONAL ELECTRICAL CODE.
12.NECA - NATIONAL ELECTRICAL CONTRACTOR'S ASSOCIATION.
13.NEMA - NATIONAL ELECTRICAL MANUFACTURERS ASSOCIATION.
14.NFPA - NATIONAL FIRE PROTECTION ASSOCIATION.
15.OSHA - OCCUPATIONAL SAFETY AND HEALTH ACT.
16.UL - UNDERWRITERS' LABORATORIES, INC.
17.LOCALLY ADOPTED BUILDING CODES AND/OR OTHER BUILDING CODES SPECIFIC TO THIS JURISDICTION.
18.LOCALLY ADOPTED ELECTRICAL CODES AND/OR OTHER ELECTRICAL CODES SPECIFIC TO THIS JURISDICTION.
19.LOCAL UTILITY AUTHORITIES.
20.LOCAL FIRE DEPARTMENT.

B. COMPLIANCE WITH GOVERNING CODES AND REGULATIONS SHALL BE SUBJECT TO THE FOLLOWING GUIDELINES:
1. DRAWINGS AND SPECIFICATION REQUIREMENTS SHALL GOVERN WHERE THEY EXCEED GOVERNING CODE AND REGULATION REQUIREMENTS.
2. WHERE REQUIREMENTS BETWEEN GOVERNING CODES AND REGULATIONS VARY, THE MORE STRINGENT SHALL APPLY.
3. NOTHING CONTAINED IN CONTRACT DOCUMENTS SHALL BE CONSTRUED AS AUTHORITY OR PERMISSION TO DISREGARD OR VIOLATE LEGAL REQUIREMENTS. CONTRACTOR SHALL IMMEDIATELY DRAW THE ATTENTION OF THE PROJECT MANAGER TO ANY SUCH CONFLICTS NOTED IN THE CONTRACT DOCUMENTS.

1.04 SUBMITTALS

A. PROVIDE ELECTRONIC COPIES OF SUBMITTALS WITH DESCRIPTIVE DATA FOR ALL PRODUCTS AND MATERIALS FOR REVIEW BY ENGINEER PRIOR TO ORDERING. SUBMITTALS SHALL CLEARLY IDENTIFY MANUFACTURER, MODEL NUMBER, AND ANY DETAILS NECESSARY TO SHOW COMPLIANCE WITH THE SPECIFICATION DOCUMENTS IN ADDITION TO THOSE PARAMETERS OUTLINED BELOW FOR THE FOLLOWING ITEMS:
1. LIGHTING FIXTURES: INCLUDING PHOTOMETRIC PERFORMANCE DATA AND ANALYSIS (WITH PARAMETERS OUTLINED) AS REQUIRED BY ENGINEER, FIXTURE POLES AND MOUNTING ARMS, BALLASTS AND LAMPS.
2. DEVICES AND EQUIPMENT: INCLUDING WALL SWITCHES, WALL-BOX DIMMERS, RECEPTACLES, DEVICE COVER PLATES, SAFETY SWITCHES, ETC.
3. OVERCURRENT DEVICES: INCLUDING TIME/CURRENT CURVES IF REQUESTED.
4. SWITCHBOARDS, DISTRIBUTION BOARDS, MOTOR CONTROL CENTERS, AND PANELBOARDS: DIMENSIONS, ENCLOSURE DATA, VOLTAGE AND PHASE, AMPACITY, OVERCURRENT DEVICES (INCLUDING QUANTITIES, AMPACITY RATINGS, TYPES, POLES, ETC.), CATALOG CUTS, AND ANY RELATED ACCESSORIES.
5. TRANSFORMERS: WEIGHT OF TRANSFORMER, MOUNTING DETAILS, AND PERFORMANCE DATA (INCLUDING IMPEDANCE, EFFICIENCY, AND SOUND LEVEL)
6. SPECIAL SYSTEMS AND EQUIPMENT: ARCHITECTURAL/THEATRICAL DIMMING EQUIPMENT AND CONTROLS, OCCUPANCY AND DAYLIGHT HARVESTING SENSORS, EMERGENCY POWER SOURCES AND RELATED TRANSFER EQUIPMENT, TRANSIENT VOLTAGE SURGE SUPPRESSORS, SUB-METERING DEVICES, ETC.

B. SHOP DRAWINGS: COORDINATED LAYOUT PLANS FOR ELECTRICAL ROOMS, INFORMATION TECHNOLOGY ROOMS, AND OTHER SPECIALIZED AREAS AS REQUESTED BY THE ENGINEER, SHOWING WORK OF ALL TRADES INCLUDING BUT NOT LIMITED TO DUCTWORK, HVAC, PLUMBING, FIRE PROTECTION PIPING, ELECTRICAL CONDUITS, BUS DUCTS, AND ALL RELATED EQUIPMENT.

1.05 SUBSTITUTIONS

A. PROCEDURE: CONTRACTOR'S BID SHALL INCLUDE PRODUCTS AS OUTLINED IN THE SPECIFICATION DOCUMENTS. EXCEPT IN THE CASE OF PRODUCT UNAVAILABILITY, SUBSTITUTIONS WILL NOT BE ALLOWED. ENGINEER WILL CONSIDER FORMAL REQUESTS FOR SUBSTITUTION OF PRODUCTS ONLY IF THE REQUEST MEETS THE FOLLOWING CONDITIONS:
1. WRITTEN EVIDENCE OF PRODUCT UNAVAILABILITY NECESSITATING THE PROPOSED SUBSTATION FROM THE SPECIFIED PRODUCT'S MANUFACTURER REPRESENTATIVE OR SUPPLIER.
2. COMPLETE DATA SUBSTANTIATING COMPLIANCE OF PROPOSED SUBSTITUTION WITH REQUIREMENTS AND SPECIFICATIONS STATED IN CONTRACT DOCUMENTS.
3. DATA RELATING TO CHANGES IN CONSTRUCTION SCHEDULE.
4. COMPLETE DESCRIPTION OF ANY EFFECT OF SUBSTITUTION ON OTHER WORK IN THIS AND OTHER TRADES.

B. FAILURE TO PLACE ORDERS FOR SPECIFIED ITEMS IN A TIMELY MANNER (WITH RESPECT TO THE PROJECT MANAGER'S CONSTRUCTION SCHEDULE) DOES NOT CONSTITUTE PRODUCT UNAVAILABILITY.

C. CONTRACTOR SHALL BE RESPONSIBLE AT NO EXTRA COST TO OWNER FOR ANY CHANGES RESULTING FROM PROPOSED SUBSTITUTIONS WHICH AFFECT WORK OF OTHER TRADES OR RELATED CONTRACTS.

D. CLAIMS FOR ADDITIONAL COSTS CAUSED BY SUBSTITUTION WHICH MAY SUBSEQUENTLY BECOME APPARENT SHALL BE MET BY THE CONTRACTOR.

E. SUBSTITUTIONS WILL NOT BE CONSIDERED FOR ACCEPTANCE WHEN ACCEPTANCE WILL REQUIRE SUBSTANTIAL REVISION OF CONTRACT DOCUMENTS, UNLESS CONTRACTOR BEARS COST OF REDESIGN.

F. SUBSTITUTE PRODUCTS SHALL NOT BE ORDERED OR INSTALLED WITHOUT PRIOR WRITTEN APPROVAL/ACCEPTANCE BY ENGINEER.

1.06 PRODUCT DELIVERY, STORAGE, AND HANDLING

A. SHIP EQUIPMENT IN ORIGINAL PACKAGES TO PREVENT DAMAGE OR ENTRANCE OF FOREIGN MATTER. HANDLE AND SHIP IN ACCORDANCE WITH MANUFACTURER'S RECOMMENDATIONS.

B. PROVIDE AND MAINTAIN PROTECTIVE COVERINGS DURING CONSTRUCTION.

C. REPLACE, AT NO EXPENSE TO OWNER, EQUIPMENT OR MATERIAL DAMAGED, LOST, OR STOLEN DURING STORAGE OR HANDLING AS DIRECTED BY THE PROJECT MANAGER.

1.07 EXISTING CONDITIONS (AS APPLICABLE)

A. VERIFICATION: BEFORE SUBMITTING BID, BECOME THOROUGHLY FAMILIAR WITH ACTUAL EXISTING CONDITIONS AND THE PRESENT INSTALLATIONS TO WHICH CONNECTIONS WILL BE MADE OR WHICH MUST BE ALTERED. THE INTENT OF THE WORK IS SHOWN ON THE DRAWINGS AND DESCRIBED HEREIN, AND NO CONSIDERATION WILL BE GRANTED BY REASON OF LACK OF FAMILIARITY ON THE PART OF THE CONTRACTOR WITH ACTUAL PHYSICAL CONDITIONS, REQUIREMENTS, AND PRACTICES AT THE SITE.

B. TEMPORARY SHUTDOWNS: SHALL BE PERFORMED AT NO ADDITIONAL CHARGES TO OWNER. SHUTDOWNS SHALL BE UNDERTAKEN AT TIMES NOT TO INTERFERE WITH NORMAL OPERATION OF EXISTING FACILITIES. OBTAIN WRITTEN CONSENT OF OWNER PRIOR TO SHUTDOWNS.

C. ALARM AND EMERGENCY SYSTEMS SHALL NOT BE INTERRUPTED.

D. CONNECTIONS TO EXISTING WORK: INSTALL NEW WORK AND CONNECT TO EXISTING WORK WITH MINIMUM INTERFERENCE TO EXISTING FACILITIES. MAINTAIN CONTINUOUS OPERATION OF EXISTING FACILITIES AS REQUIRED WITH NECESSARY TEMPORARY CONNECTIONS BETWEEN NEW AND EXISTING WORK. CONNECT NEW WORK TO EXISTING WORK IN NEAT AND ACCEPTABLE MANNER. RESTORE EXISTING DISTURBED WORK TO ORIGINAL CONDITION INCLUDING MAINTENANCE OF WIRING CONTINUITY AS REQUIRED.

E. REMOVAL AND RELOCATION OF EXISTING WORK:
1. DISCONNECT AND REMOVE OR RELOCATE ANY ELECTRICAL EQUIPMENT AND/OR DEVICES REQUIRED BY REMOVAL OR CHANGES IN EXISTING CONSTRUCTION.
2. REMOVE CONDUCTORS FROM EXISTING RACEWAYS TO BE REUSED AND REPLACE WITH NEW CONDUCTORS.
3. REMOVE EXISTING CONDUCTORS NO LONGER USED. REMOVE RACEWAYS IN ALL CASES EXCEPT WHERE THE REMOVAL OF THE RACEWAY WOULD CAUSE DAMAGE TO EXISTING CONSTRUCTION. CAP AND MARK AS "ABANDONED" ANY UNUSED RACEWAYS TO REMAIN.
4. CUT AND CAP ABANDONED FLOOR RACEWAYS FLUSH WITH CONCRETE FLOOR OR BEHIND WALLS AND CEILINGS.
5. DISPOSE OF ALL REMOVED RACEWAYS AND WIRE.
6. DISPOSE OF REMOVED ELECTRICAL EQUIPMENT, LIGHTING FIXTURES, AND DEVICES AS DIRECTED.
7. CUT AND PATCH EXISTING CONSTRUCTION AS REQUIRED. ALL PATCHING SHALL BE OF THE SAME MATERIALS, FINISH, AND WORKMANSHIP AS THE EXISTING AREA AND SHALL ACCURATELY MATCH ALL SURROUNDING WORK TO THE SATISFACTION OF THE PROJECT MANAGER.
8. IF ASBESTOS INSULATION IS FOUND WHEN WORKING IN EXISTING AREAS, IMMEDIATELY STOP WORK AND NOTIFY PROJECT MANAGER. DO NOT RESTART WORK UNTIL ADVISED IN WRITING BY PROJECT MANAGER THAT IT IS SAFE TO DO SO FOLLOWING ABATEMENT, ENCAPSULATIONS, ETC.

1.08 TELECOMMUNICATIONS AND OTHER LOW-VOLTAGE SYSTEMS

A. SCOPE: ALL TELECOMMUNICATIONS AND OTHER LOW-VOLTAGE CABLE DESIGNS ARE OUTSIDE OF THE SCOPE OF THE ELECTRICAL DOCUMENTS. THE DOCUMENTS REPRESENT THE GENERAL ARRANGEMENT OF EMPTY RACEWAYS AND BOXES TO ACCOMMODATE THE TELECOMMUNICATIONS AND LOW-VOLTAGE SYSTEMS. CONTRACTOR SHALL VERIFY EXACT RACEWAY, JUNCTION BOX, AND DEVICE BOX REQUIREMENTS WITH THE OWNER'S SELECTED TELECOMMUNICATIONS CONSULTANT PRIOR TO ORDERING THE COMPONENTS OF THE RACEWAY AND BOX SYSTEM.

B. SUBMITTALS: CONTRACTOR SHALL SUBMIT ALL COMPONENTS OF THE TELECOMMUNICATION AND OTHER LOW-VOLTAGE SYSTEMS TO THE OWNER'S SELECTED TELECOMMUNICATIONS CONSULTANT FOR APPROVAL.

PART II - PRODUCTS

2.01 QUALITY ASSURANCE

A. QUALITY OF MATERIALS SHALL BE IN ACCORDANCE WITH THE FOLLOWING:
1. MATERIALS SHALL BE NEW AND LISTED BY UL (OR SIMILAR AGENCY ACCEPTED BY THE AUTHORITY HAVING JURISDICTION) AND BEARING THEIR LABEL.
2. MATERIALS AND EQUIPMENT OF SIMILAR APPLICATION SHALL BE OF THE SAME MANUFACTURE, UNLESS OTHERWISE NOTED.
3. MATERIALS SHALL CONFORM TO NEMA, ANSI, AND IEEE STANDARDS.

2.02 RACEWAYS

A. RIGID GALVANIZED STEEL CONDUIT (RGS): FULL-WEIGHT PIPE, GALVANIZED, THREADED.

B. INTERMEDIATE METAL CONDUIT (IMC): LIGHTWEIGHT STEEL PIPE, GALVANIZED, THREADED.

C. ELECTROMETALLIC TUBING (EMT): THIN WALL PIPE, GALVANIZED, THREADLESS.

D. RIGID NONMETALLIC CONDUIT: SCHEDULE 40 PVC.

E. FLEXIBLE STEEL CONDUIT: STANDARD-WALL, GALVANIZED.

F. FLEXIBLE ALUMINUM CONDUIT: STANDARD-WALL.

G. MINIMUM TRADE SIZE IS 1/2" FOR ALL RIGID AND FLEXIBLE CONDUITS.

2.03 RACEWAY FITTINGS AND ACCESSORIES

A. RIGID GALVANIZED AND INTERMEDIATE METAL CONDUIT: ZINC DIE CAST NOT PERMITTED.

B. ELECTROMETALLIC TUBING: COMPRESSION (WET LOCATIONS) OR DOUBLE SET SCREW TYPE (DRY LOCATIONS ONLY). GALVANIZED RIGID STEEL ELBOWS, 2 IN. OR LARGER.

C. FLEXIBLE METALLIC CONDUIT: ANGLE WEDGE TYPE WITH INSULATED THROAT. D. BUSHINGS: METALLIC INSULATED TYPE.

2.04 BOXES

A. OUTLET BOXES: STAMPED OR WELDED STEEL, 4 IN. SQUARE OR OCTAGON WITH APPROPRIATE MUD RING, EXCEPT AS OTHERWISE REQUIRED BY CONSTRUCTION, DEVICES OR WIRING, AS FOLLOWS:
1. LIGHTING FIXTURES: 1-1/2" DEEP ABOVE CEILING, 2-1/8" DEEP IN WALL.
2. IN WALL FOR RECEPTACLES, SWITCHES, TELE/DATA DEVICES: 1-1/2" DEEP.
3. IN WALL FOR WALL-BOX DIMMERS AND GFCI RECEPTACLES: 2-1/8" DEEP.
4. WITH RAISED COVERS AND FIXTURE STUDS WHERE REQUIRED.
5. THROUGH-THE-WALL TYPE, NOT PERMITTED.
6. WITHOUT FIXTURE OR DEVICE: BLANK COVER.
7. OFFSET BACK-TO-BACK OUTLETS: MINIMUM 6 IN. SEPARATION. COVER BACK BOXES WITH EITHER FIRE OR SOUND PUTTY PAD.

B. BOXES FOR WET/DAMP LOCATIONS: WEATHERPROOF (NEMA 3R), CAST METAL.

C. IN HAZARDOUS LOCATIONS: CAST, COPPER-FREE ALUMINUM.

D. JUNCTION AND PULL BOXES: GALVANIZED SHEET STEEL, SCREW-ON COVERS, INSULATED SUPPORTS FOR CABLES, INSTALLED ONLY IN ACCESSIBLE LOCATIONS.

E. FLOOR BOXES: GALVANIZED CAST IRON WITH BRASS COVERS AND FLANGES, SUITABLE FOR CONDUIT AND DEVICES INDICATED.

F. EXTERIOR GRADE-MOUNTED PULL BOXES: CONCRETE OR COMPOSITE FIBER CONSTRUCTION WITH BOLT-DOWN COVERS. METALLIC COVERS ARE NOT PERMITTED.

G. PROVIDE BARRIERS IN ALL BOXES BETWEEN 480Y/277 VOLT WIRING ENERGIZED FROM SEPARATE SERVICES, 208Y/120 VOLT AND 480Y/277 VOLT WIRING, EMERGENCY AND NORMAL WIRING.

2.05 WIRE AND CABLE

A. CONDUCTORS: ASTM STANDARD SOLID; STRANDED FOR #8 AWG AND LARGER.
1. TYPE: COPPER, UNLESS OTHERWISE NOTED. CONTRACTOR SHALL NOT SUBSTITUTE ALUMINUM FOR ANY BRANCH CIRCUITS. CONTRACTOR MAY SUBSTITUTE ALUMINUM FOR FEEDERS SIZED #1/0 AWG OR LARGER ONLY WITH WRITTEN CONSENT OF ENGINEER.
2. SIZE, FOR GENERAL USE (BASED UPON 10A LOAD):
A. #12 AWG MINIMUM FOR ALL CIRCUITS 120V OR MORE.
B. FOR 20A/1P 120V BRANCH CIRCUITS OVER 70 FEET IN TOTAL LENGTH: #10 AWG THROUGHOUT ENTIRE CIRCUIT.
C. FOR 20A/1 P 120V BRANCH CIRCUITS OVER 110 FEET IN TOTAL LENGTH: #8 AWG FOR HOMERUN, #10 AWG THROUGHOUT REMAINDER OF CIRCUIT.
D. FOR 20A/1P 277V BRANCH CIRCUIT HOMERUNS OVER 160 FEET IN LENGTH: #10 AWG THROUGHOUT ENTIRE CIRCUIT.
E. FOR 20A/1 P 277V BRANCH CIRCUITS OVER 260 FEET IN LENGTH: #8 AWG FOR HOMERUN, #10 AWG THROUGHOUT REMAINDER OF CIRCUIT.
3. SIZE, FOR CONTROL AND ALARM: #14 AWG MINIMUM, EXCEPT FOR 120V CIRCUITS OR CIRCUITS OVER 200 FEET IN LENGTH PROVIDE #12 AWG MINIMUM.
4. OTHER VOLTAGES AND PHASES: BRANCH CIRCUIT SIZE ADJUSTED AS REQUIRED TO MAINTAIN VOLTAGE DROP BELOW 3% (FEEDERS BELOW 2%).
5. WHERE BRANCH CIRCUITS OR FEEDERS HAVE BEEN ADJUSTED FOR VOLTAGE DROP, INCREASE RACEWAY SIZES FOR LARGER WIRE AS REQUIRED. EQUIPMENT GROUNDING CONDUCTOR TO BE RESIZED TO CORRESPOND TO THE NORMAL AMPACITY OF THE NEW FEEDER SIZE.

B. INSULATION:
1. THWN-2/THHN: FEEDERS AND BRANCH CIRCUITS EXCEPT AS NOTED.
2. SFF-2: BRANCH CIRCUITS LOCATED IN WIRING CHANNELS OF CONTINUOUS FLUORESCENT FIXTURES OR WHERE AMBIENT TEMPERATURES EXCEED 90°C.
3. TYPE NM ("ROMEX") CABLE NOT ALLOWED.
4. COLOR CODING: CONDUCTORS SHALL BE COLOR CODED TO DIFFERENTIATE THE PHASES, THE SAME COLOR CODE BEING ASSIGNED TO THE SAME PHASE THROUGHOUT THE PROJECT.
5. RATING: CONDUCTORS FOR CIRCUITS RATED 30A OR LESS HAVE BEEN SIZED BASED UPON 60° C TEMPERATURE RATING [NEC TABLE 310.15 (B)(16)]. CONDUCTORS FOR CIRCUITS RATED OVER 30A HAVE BEEN SIZED BASED UPON 75° C TEMPERATURE RATING. 90° C CONDUCTOR TEMP RATING IS USED ONLY FOR CALCULATING DERATING WHERE ALLOWED BY NEC.

C. METAL CLAD (MC) CABLE: FOR BRANCH CIRCUITS IN DRY LOCATIONS, WALLS, HUNG CEILINGS, AND FURRED SPACES TO BRANCH DISTRIBUTION BOX ONLY. NOT ALLOWED FOR HOMERUNS.

D. TAGS: PROVIDE TAGS IN ACCESSIBLE LOCATIONS FOR ALL FEEDERS, MADE OF FLAMEPROOF LINEN OR FIBER, INDICATING FEEDER SIZE, PHASE, AND POINTS OF ORIGIN AND TERMINATIONS.

E. TERMINATIONS, SPLICES AND TAPS UNDER 600V:
1. COPPER CONDUCTORS #10 AWG AND SMALLER: WITH COMPRESSION-TYPE OF TWIST-ON SPRING-LOADED CONNECTORS AND NYLON-INSULATED COVERING.
2. COPPER CONDUCTORS #8 AWG AND LARGER: MECHANICAL BOLTED PRESSURE OR HYDRAULIC-COMPRESSION TYPE USING MANUFACTURER'S RECOMMENDED TOOLING.
3. CABLE LUGS AND CONNECTORS: COMPRESSION TYPE OF SAME METAL AS CONDUCTOR. PROVIDE TO MATCH CABLE, WITH MARKING INDICATING SIZE AND TYPE.

2.06 DEVICES

A. LOCAL WALL SWITCHES: HEAVY DUTY, TOGGLE, OR ROCKER QUIET TYPE, 20A, 120/277VAC, COORDINATE WITH ARCHITECT FOR FINISH COLOR.

B. DIMMER SWITCHES: SLIDER TYPE, SIZED PER TOTAL CONTROLLED LOAD OR AS INDICATED, COORDINATE WITH ARCHITECT FOR FINISH COLOR.

C. RECEPTACLES:
A. DUPLEX CONVENIENCE: NEMA 5-20R UNLESS OTHERWISE NOTED. GFCI-TYPE WHERE INDICATED OR REQUIRED BY CODE, COORDINATE WITH ARCHITECT FOR FINISH COLOR.
B. SINGLE: NEMA 5-20R UNLESS NOTED OTHERWISE, COORDINATE WITH ARCHITECT FOR FINISH COLOR.
C. SPECIAL USE: NEMA TYPES AND RATINGS AS INDICATED ON DRAWINGS OR AS REQUIRED TO MATCH EQUIPMENT CAP OF EQUIPMENT.
D. DEVICE PLATES: VERIFY TYPE WITH ARCHITECT.
E. WEATHERPROOF DEVICE COVERS: FOR RECEPTACLES INSTALLED OUTDOORS, PROVIDE NEMA 3R, CAST METAL, LOCKABLE, "IN-USE" TYPE COVERS.

2.07 LOW VOLTAGE DISTRIBUTION EQUIPMENT

A. DISCONNECT SWITCHES:
1. FUSED OR NONFUSED AS NOTED.
2. VOLTAGE AS REQUIRED FOR APPLICATION.
3. AMPACITY AS REQUIRED FOR APPLICATION (MINIMUM SIZE SHALL BE 125% OF FULL-LOAD AMPS OF EQUIPMENT SERVED, UNLESS OTHERWISE NOTED).
4. HEAVY DUTY, UNLESS OTHERWISE NOTED.
5. HORSEPOWER RATED FOR MOTOR LOADS.
6. TOGGLE TYPE: NON-FUSED, MAXIMUM RATING OF 20A AT 600V OR 30A AT 250V, USE ONLY WHEN FULL-LOAD AMPS OF LOAD DOES NOT EXCEED 80% OF SWITCH RATING.
7. KNIFE-BLADE TYPE: LOAD BREAK, QUICK-MAKE-QUICK-BREAK, UL CLASS R UP TO 600V, MAXIMUM RATING 800A EXCEPT AS NOTED, ARC QUENCHERS, INDIVIDUALLY MOUNTED EXCEPT AS NOTED.

B. FUSES:
1. MATCH EXISTING WHERE APPLICABLE.
2. FOR MOTOR AND TRANSFORMER LOADS: CURRENT LIMITING, DUAL ELEMENT, TIME DELAY TYPE, 200,000 AIC, EQUAL TO BUSSMANN FUSETRON FRN OR FRS OR LO-PEAK LPN OR LPS (UL CLASS RK), VOLTAGE RATINGS TO SUIT APPLICATIONS, AMP RATINGS PER PLANS, UNLESS OTHERWISE NOTED.
3. FOR OTHER LOADS: CURRENT LIMITING, FAST ACTING TYPE, 200,000 AIC, EQUAL TO BUSSMANN DUAL-ELEMENT KTN, KTS, OR KTU (UL CLASS R, UP TO 600A; CLASS L, OVER 600A), UNLESS OTHERWISE NOTED.
4. ALL FUSES SHALL BE OF THE SAME MANUFACTURER.
5. SUPPLY 1 SPARE MATCHING FUSE FOR EACH SET OF 3 INSTALLED.

C. CIRCUIT BREAKERS:
1. GENERAL REQUIREMENTS: THERMAL-MAGNETIC, QUICK-MAKE-QUICK-BREAK, MANUALLY OPERATED WITH INSULATED TRIP-FREE HANDLE, MULTI-POLE TYPES WITH INTERNAL TRIP BAR, TERMINALS UL LISTED FOR 75° C, SUITABLE FOR COPPER OR ALUMINUM, HACR-RATED TO SUIT APPLICATION, MANUFACTURER TO MATCH EXISTING EQUIPMENT, IF ANY.
2. SHORT CIRCUIT INTERRUPTING CAPACITY:
A. SIZE TO MATCH EQUIPMENT AIC RATING INDICATED ON DIAGRAMS AND SCHEDULES.
B. SERIES-RATED COMBINATIONS: AIC RATINGS ON DRAWINGS ARE BASED UPON FULLY-RATED EQUIPMENT. SERIES-RATED EQUIPMENT IS ALLOWED ONLY IF SPECIFICALLY IDENTIFIED ON THESE DRAWINGS.
3. GFCI PROTECTION: WHERE THE ELECTRICAL CODE REQUIRES GFCI PROTECTION OF SPECIFIC RECEPTACLES WHICH ARE NOT READILY ACCESSIBLE (SUCH AS BEHIND REFRIGERATORS OR SIMILAR UTILIZATION EQUIPMENT), PROVIDE GFCI-TYPE CIRCUIT BREAKERS IN LIEU OF GFCI RECEPTACLES.

D. MOTOR CONTROLLERS/STARTERS:
1. MANUAL MOTOR CONTROLLERS: 600VAC HEAVY DUTY RATED, SINGLE- OR MULTI-POLE TO SUIT APPLICATION, MOUNTED IN SUITABLE NEMA ENCLOSURE, HORSEPOWER RATED TO SUIT MOTOR TO BE CONTROLLED, H-O-A OR START-STOP OPERATION AS NEEDED FOR APPLICATION.

E. BRANCH CIRCUIT PANELBOARDS:
1. GENERAL REQUIREMENTS:
A. PROVIDE FACTORY-ASSEMBLED, ENCLOSED PANELBOARDS WITH DOORS, SURFACE-MOUNTED OR RECESSED AS INDICATED.
B. PROVIDE FEEDER TERMINAL LUGS FOR BOTH MAIN BREAKERS AND MAIN LUGS, RATED FOR USE WITH COPPER OR ALUMINUM CABLES AS REQUIRED.
C. ALL DOOR LOCKS SHALL BE KEYED ALIKE.
D. PROVIDE SEPARATE HINGED AND LOCKABLE DOORS FOR MAIN CONTACTOR COMPARTMENTS AS REQUIRED.
E. AIC RATING FOR PANEL BUS SHALL BE AS INDICATED ON DRAWINGS.
F. PANEL BUS MAY BE COPPER OR ALUMINUM.
G. PROVIDE CONTROL TRANSFORMER FOR THE SHUNT TRIP ELEMENT IN THE PANELBOARD ENCLOSURE AS REQUIRED.
H. PROVIDE CIRCUIT DIRECTORY CONSISTING OF METAL FRAME WITH TRANSPARENT PLASTIC COVER. PROVIDE TYPEWRITTEN LIST INDICATING CIRCUIT NUMBERS AND LOADS TO MATCH ACTUAL "AS-BUILT" CONDITIONS (TO CORRESPOND WITH PROJECT RECORD DRAWINGS).
2. ACCEPTABLE MANUFACTURERS: SQUARE D, SIEMENS, GENERAL ELECTRIC, AND EATON/CUTLER-HAMMER.

F. ENCLOSURES: DEAD FRONT, NEMA TYPE 1 (INDOOR) OR NEMA TYPE 3R (OUTDOOR), UNLESS OTHERWISE NOTED. ALL EQUIPMENT SHALL HAVE SUFFICIENT GUTTER SPACE TO ACCOMMODATE THE THE QUANTITY AND SIZE OF CONDUCTORS REQUIRED. CONTRACTOR SHALL PROVIDE LISTED OVERSIZED ENCL

COM*check* Software Version 4.1.5.3

Interior Lighting Compliance Certificate

Project Information

Energy Code: 2015 IECC
Project Title: Prospect Lake Equipment Shed
Project Type: New Construction

Construction Site:
Prospect Lake
Colorado Springs, CO 80910

Owner/Agent:

Designer/Contractor:
Ramirez, Johnson, and Associates
3301 Lawrence St
Suite 2
Denver, CO 80205
720.598.0774

Additional Efficiency Package(s)

Credits: 1.0 Required 1.0 Proposed
Reduced Lighting Power, 1.0 credit

Allowed Interior Lighting Power

A Area Category	B Floor Area (ft2)	C Allowed Watts / ft2	D Allowed Watts (B X C)
1-Equipment Shed (Workshop)	240	1.07	257
		Total Allowed Watts =	257

Proposed Interior Lighting Power

A Fixture ID : Description / Lamp / Wattage Per Lamp / Ballast	B Lamps/ Fixture	C # of Fixtures	D Fixture Watt.	E (C X D)
1-Equipment Shed (Workshop)				
LED 1: S1: 4' Strip Luminaire: LED Linear 33W:	1	2	42	84
			Total Proposed Watts =	84

Interior Lighting PASSES: Design 67% better than code

Interior Lighting Compliance Statement

Compliance Statement: The proposed interior lighting design represented in this document is consistent with the building plans, specifications, and other calculations submitted with this permit application. The proposed interior lighting systems have been designed to meet the 2015 IECC requirements in COM*check* Version 4.1.5.3 and to comply with any applicable mandatory requirements listed in the Inspection Checklist.

Theresa Gray, PE — Name - Title
Signature
02/16/2023 — Date

COM*check* Software Version 4.1.5.3

Exterior Lighting Compliance Certificate

Project Information

Energy Code: 2015 IECC
Project Title: Prospect Lake Equipment Shed
Project Type: New Construction
Exterior Lighting Zone 2 (Residential mixed use area (LZ2))

Construction Site:
Prospect Lake
Colorado Springs, CO 80910

Owner/Agent:

Designer/Contractor:
Ramirez, Johnson, and Associates
3301 Lawrence St
Suite 2
Denver, CO 80205
720.598.0774

Allowed Exterior Lighting Power

A Area/Surface Category	B Quantity	C Allowed Watts / Unit	D Tradable Wattage	E Allowed Watts (B X C)
Loading Door (Emergency services, loading area)	50 ft2	0.5	No	25
			Total Tradable Watts (a) =	0
			Total Allowed Watts =	25
			Total Allowed Supplemental Watts (b) =	600

(a) Wattage tradeoffs are only allowed between tradable areas/surfaces.
(b) A supplemental allowance equal to 600 watts may be applied toward compliance of both non-tradable and tradable areas/surfaces.

Proposed Exterior Lighting Power

A Fixture ID : Description / Lamp / Wattage Per Lamp / Ballast	B Lamps/ Fixture	C # of Fixtures	D Fixture Watt.	E (C X D)
Loading Door (Emergency services, loading area 50 ft2): Non-tradable Wattage				
LED 1: W1: Exterior Wall Sconce: LED A Lamp 9W:	1	1	9	9
			Total Tradable Proposed Watts =	0

Exterior Lighting PASSES: Design 0.0% better than code

Exterior Lighting Compliance Statement

Compliance Statement: The proposed exterior lighting design represented in this document is consistent with the building plans, specifications, and other calculations submitted with this permit application. The proposed exterior lighting systems have been designed to meet the 2015 IECC requirements in COM*check* Version 4.1.5.3 and to comply with any applicable mandatory requirements listed in the Inspection Checklist.

Theresa Gray, PE — Name - Title
Signature
02/16/2023 — Date

COM*check* Software Version 4.1.5.3

Inspection Checklist

Energy Code: 2015 IECC

Requirements: 64.0% were addressed directly in the COM*check* software

Text in the "Comments/Assumptions" column is provided by the user in the COMcheck Requirements screen. For each requirement, the user certifies that a code requirement will be met and how that is documented, or that an exception is being claimed. Where compliance is itemized in a separate table, a reference to that table is provided.

Section # & Req.ID	Plan Review	Complies?	Comments/Assumptions
C103.2 [PR4][1]	Plans, specifications, and/or calculations provide all information with which compliance can be determined for the interior lighting and electrical systems and equipment and document where exceptions to the standard are claimed. Information provided should include interior lighting power calculations, wattage of bulbs and ballasts, transformers and control devices.	☐Complies ☐Does Not ☐Not Observable ☐Not Applicable	
C103.2 [PR8][1]	Plans, specifications, and/or calculations provide all information with which compliance can be determined for the exterior lighting and electrical systems and equipment and document where exceptions to the standard are claimed. Information provided should include exterior lighting power calculations, wattage of bulbs and ballasts, transformers and control devices.	☐Complies ☐Does Not ☐Not Observable ☐Not Applicable	
C406 [PR9][1]	Plans, specifications, and/or calculations provide all information with which compliance can be determined for the additional energy efficiency package options.	☐Complies ☐Does Not ☐Not Observable ☐Not Applicable	

Additional Comments/Assumptions:

1 High Impact (Tier 1) 2 Medium Impact (Tier 2) 3 Low Impact (Tier 3)

Section # & Req.ID	Rough-In Electrical Inspection	Complies?	Comments/Assumptions
C405.2.1 [EL15][1]	Lighting controls installed to uniformly reduce the lighting load by at least 50%.	☐Complies ☐Does Not ☐Not Observable ☐Not Applicable	**Exception:** Lighting that is related to means of egress in stairways, ramps, corridors, or emergency routes.
C405.2.1 [EL18][1]	Occupancy sensors installed in required spaces.	☐Complies ☐Does Not ☐Not Observable ☐Not Applicable	Requirement will be met.
C405.2.1, C405.2.2.3 [EL23][2]	Independent lighting controls installed per approved lighting plans and all manual controls readily accessible and visible to occupants.	☐Complies ☐Does Not ☐Not Observable ☐Not Applicable	Requirement will be met.
C405.2.2.1 [EL22][2]	Automatic controls to shut off all building lighting installed in all buildings.	☐Complies ☐Does Not ☐Not Observable ☐Not Applicable	Requirement will be met.
C405.2.3 [EL16][2]	Daylight zones provided with individual controls that control the lights independent of general area lighting.	☐Complies ☐Does Not ☐Not Observable ☐Not Applicable	**Exception:** Requirement does not apply. **Location on plans/spec:** No daylight zones in scope.
C405.2.3, C405.2.3.1, C405.2.3.2 [EL20][1]	Primary sidelighted areas are equipped with required lighting controls.	☐Complies ☐Does Not ☐Not Observable ☐Not Applicable	**Exception:** Requirement does not apply. **Location on plans/spec:** No daylight zones in scope.
C405.2.3, C405.2.3.1, C405.2.3.3 [EL21][1]	Enclosed spaces with daylight area under skylights and rooftop monitors are equipped with required lighting controls.	☐Complies ☐Does Not ☐Not Observable ☐Not Applicable	**Exception:** Requirement does not apply. **Location on plans/spec:** No daylight zones in scope.
C405.2.4 [EL4][1]	Separate lighting control devices for specific uses installed per approved lighting plans.	☐Complies ☐Does Not ☐Not Observable ☐Not Applicable	Requirement will be met.
C405.2.4 [EL8][1]	Additional interior lighting power allowed for special functions per the approved lighting plans and is automatically controlled and separated from general lighting.	☐Complies ☐Does Not ☐Not Observable ☐Not Applicable	Requirement will be met.
C405.2.5 [EL25][Null]	Automatic lighting controls for exterior lighting installed. Controls will be daylight controlled, set based on business operation time-of-day, or reduce connected lighting > 30%.	☐Complies ☐Does Not ☐Not Observable ☐Not Applicable	Requirement will be met.
C405.3 [EL6][1]	Exit signs do not exceed 5 watts per face.	☐Complies ☐Does Not ☐Not Observable ☐Not Applicable	Requirement will be met.

Additional Comments/Assumptions:

1 High Impact (Tier 1) 2 Medium Impact (Tier 2) 3 Low Impact (Tier 3)

1 High Impact (Tier 1) 2 Medium Impact (Tier 2) 3 Low Impact (Tier 3)

Section # & Req.ID	Final Inspection	Complies?	Comments/Assumptions
C303.3, C408.2.5.2 [FI17][1]	Furnished O&M instructions for systems and equipment to the building owner or designated representative.	☐Complies ☐Does Not ☐Not Observable ☐Not Applicable	
C405.4.1 [FI18][1]	Interior installed lamp and fixture lighting power is consistent with what is shown on the approved lighting plans, demonstrating proposed watts are less than or equal to allowed watts.	☐Complies ☐Does Not ☐Not Observable ☐Not Applicable	*See the Interior Lighting fixture schedule for values.*
C405.5.1 [FI19][1]	Exterior lighting power is consistent with what is shown on the approved lighting plans, demonstrating proposed watts are less than or equal to allowed watts.	☐Complies ☐Does Not ☐Not Observable ☐Not Applicable	*See the Exterior Lighting fixture schedule for values.*
C408.2.5.1 [FI16][1]	Furnished as-built drawings for electric power systems within 90 days of system acceptance.	☐Complies ☐Does Not ☐Not Observable ☐Not Applicable	
C408.3 [FI33][1]	Lighting systems have been tested to ensure proper calibration, adjustment, programming, and operation.	☐Complies ☐Does Not ☐Not Observable ☐Not Applicable	

Additional Comments/Assumptions:

1 High Impact (Tier 1) 2 Medium Impact (Tier 2) 3 Low Impact (Tier 3)

Released for Permit
08/01/2023 4:53:32 PM
Pikes Peak Regional Building Department
shelby
ELECTRICAL

Ramirez, Johnson, & Associates
3301 Lawrence St. Ste 2
Denver, CO 80205
P: 720.598.0774

JUST ARCHITECTURE & DESIGN
PHONE: (720) 323-1493
email: kyle@justarchitectureanddesign.com
9815 Westbury Ct, Highlands Ranch, CO 80129

COLORADO LICENSED THERESA W. GRAY 41315 02/17/2023 PROFESSIONAL ENGINEER

STAMP

PROSPECT LAKE EQUIPMENT BUILDING

PROSPECT LAKE, COLORADO SPRINGS, CO

#	DATE	ISSUE
1	2-20-23	1ST PERMIT
2		
3		
4		
5		
6		

PROJECT NUMBER: 23-001
DRAWN BY: SCA
CHECKED BY: TWG

ALL INSTRUMENTS OF SERVICE, ALL DESIGNS, IDEAS AND INFORMATION SHOWN ON THESE DRAWINGS ARE AND SHALL REMAIN THE PROPERTY OF JUST ARCHITECTURE & DESIGN, LTD. NO PART THEREOF SHALL BE COPIED, DISCLOSED TO OTHERS, OR USED IN CONNECTION WITH ANY PROJECT OTHER THAN THE SPECIFIC PROJECT FOR WHICH THEY HAVE BEEN PREPARED WITHOUT THE WRITTEN CONSENT OF JUST ARCHITECTURE & DESIGN, LTD. VISUAL CONTACT WITH THESE DRAWINGS SHALL CONSTITUTE CONCLUSIVE EVIDENCE OF ACCEPTANCE OF THESE RESTRICTIONS

COMCHECK

E003

SHORT CIRCUIT / VOLTAGE DROP ANALYSIS CALCULATIONS

PROJECT NAME: PROSPECT LAKE EQUIPMENT SHED **PROJECT NO:** 23.011 **BY:** SCA

	INITIAL FROM	ISC	PRI VOLT	TO	LOAD AMPS	CABLE USED	FT	SETS OF CONDS	AWG OR MCM	AL OR CU	MAG OR NMAG	C VALUE	CIRC MILS	FINAL F	M	ISC	SEGMENT VD VD	% VD (L-N)	CUMM VD VD	%VD (L-N)	
X0	UTIL XFMR - 300KVA	59600	208	DISCONNECT/METER	83	X	450	1	250	CU	NMAG	18594	250000	12.01111	0.076857	**4581**	3.5	1.7	3.5	**1.7**	X0
X1	DISCONNECT/METER	4581	208	PANEL P1	83	X	10	1	1/0	CU	MAG	8925	105600	0.04274	0.959013	**4393**	0.2	0.1	3.6	**1.8**	X1

NOTES:
1. **FEEDER LENGTHS ARE TO BE IN FEET AND AS SHOWN ON THE DRAWINGS PER NEC 110.9 AND 110.10. FEEDER LENGTH SHORTER THAN SPECIFIED WILL NOT BE ACCEPTED. CONTRACTOR SHALL NOTIFY ENGINEER OF ANY FIELD CONDITION THAT RESULTS IN A CHANGE OF 10% OR GREATER CIRCUIT DISTANCE.**

MECHANICAL EQUIPMENT SCHEDULE

KEY	ITEM	LISTED LOAD HP	FLA/MCA	KW	EQUIV. LOAD (VA)	VOLTS	PH	FEEDERS CONDUCTORS	CONDUIT	DISCONNECT DISC SW	CIRCUIT BREAKER SIZE	NOTES
EF-1	EXHAUST FAN	3			4077	208	1	2 # 8, 1 # 10 G	3/4	60A/2P	35A/2P	1
EUH-1	ELECTRIC HEATER		14.5		3016	208	1	2 # 12, 1 # 12 G	3/4	30A/2P	20A/2P	1

GENERAL NOTES:
1. **REFER TO MECHANICAL DRAWINGS FOR MECHANICAL EQUIPMENT LOCATIONS.**
2. **DIVISION 26 CONTRACTOR TO VERIFY EXACT POWER REQUIREMENTS WITH DIVISION 23 CONTRACTOR PRIOR TO ROUGH-IN.**

NOTES:
1. **NON-FUSED DISCONNECT PROVIDED BY DIVISION 23 CONTRACTOR. REFER TO MECHANICAL SCHEDULES FOR ADDITIONAL INFORMATION.**

LUMINAIRE SCHEDULE

TYPE	DESCRIPTION	MANUFACTURER OR APPROVED EQUIVALENT	CATALOG SERIES NUMBER OR APPROVED EQUIVALENT	LAMPS (QTY) TYPE	INPUT VA	DRIVER/DIM PROTOCOL	LUMENS	VOLTAGE	MOUNTING	BUG RATING	NOTES
S1	4' STRIP LUMINAIRE	COLUMBIA	LCL-4-35-ML-E-U	LED 3500K	42	0-10V	5329	120	SURFACE	N/A	
W1	EXTERIOR WALL SCONCE, FULL CUTOFF	BEGA	24218-K3	LED 3000K	8.9	0-10V	938	120	WALL	B1 U0 G0	
X1	EXTERIOR RATED EMERGENCY LED LIGHT	DUAL LITE	PG-B	LED	3	-	-	120	SURFACE	N/A	1

ABBREVIATIONS: BF - BOTTOM OF FIXTURE; OH - OVERALL FIXTURE HEIGHT; RD - RECESSED FIXTURE DEPTH; AFF - ABOVE FINISHED FLOOR

GENERAL NOTES:
- **A. LUMINAIRE SHOWN WITH CATALOG NUMBERS ARE THE BASIS OF DESIGN. SIMILAR BY OTHER LISTED MANUFACTURERS ARE ACCEPTABLE WITH PRIOR APPROVAL BY OWNER AND ENGINEER.**
- **B. CONTRACTOR TO VERIFY LIGHT FIXTURE CATALOG NUMBER AND INSTALLATION REQUIREMENTS PRIOR TO ORDERING.**
- **C. VERIFY TRIM COMPATIBILITY WITH CEILING TYPE PRIOR TO SUBMITTALS.**

SCHEDULED NOTES:
1. **PROVIDE WITH 90 MINUTE BATTERY BACKUP, INTEGRAL SELF DIAGNOSTICS, ARROWS AS SHOWN ON PLANS AND MOUNTING TYPE AS SHOWN ON PLAN.**

PANEL P1

PROJECT:	PROSPECT LAKE EQUIPMENT SHED	**VOLTAGE L-L (V):**	208
JOB NO.:	23.011	**VOLTAGE L-N (V):**	120
LOCATION:	SEE PLANS	**TYPE:**	3-PHASE, 4-WIRE
MINIMUM BUS CAPACITY (A):	225	**SHORT CIRCUIT RATING (A):**	10,000
MAIN O.C. DEVICE (A):	MLO	**MOUNTING:**	SURFACE
DESIGN CAPACITY (A):	150	**COMMENTS:**	

DEVICE AMPS	POLE	LIGHTING (VA)	RCPT (VA)	MOTOR (VA)	OTHER (VA)	DESCRIPTION	CKT NO.	PHASE	CKT NO.	DESCRIPTION	OTHER (VA)	MOTOR (VA)	RCPT (VA)	LIGHTING (VA)	POLE	DEVICE AMPS
20	1	93				LIGHTING	1	A	2	CA-1 AIR COMPRESSOR 7.5HP		3547			2	50
20	1		540			RECEPTACLES	3	B	4	-		3547			-	-
35	2			2039		EF-1	5	C	6	CA-2A AIR COMPRESSOR 5HP		2444			2	40
-	-			2039		-	7	A	8	-		2444			-	-
20	2				E 1508	EUH-1	9	B	10	CA-2B AIR COMPRESSOR 5HP		2444			2	40
-	-				E 1508	-	11	C	12	-		2444			-	-
20	1				E 420	FC-1 FLOW CONTROLLER	13	A	14	MOTORIZED DAMPERS		150			1	20
20	1					SPARE	15	B	16	AD-1A AIR DRYER	E 600				1	20
20/GFCI	1			1176		GARAGE DOOR	17	C	18	AD-1B AIR DRYER	E 600				1	20
20	1					SPARE	19	A	20	SPARE					1	20
						BUSSED SPACE	21	B	22	AD-C AIR DRYER	E 600				1	20
						BUSSED SPACE	23	C	24	BUSSED SPACE						
						BUSSED SPACE	25	A	26	BUSSED SPACE						
						BUSSED SPACE	27	B	28	BUSSED SPACE						
						BUSSED SPACE	29	C	30	BUSSED SPACE						

CONNECTED VA PHASE A:	8,693	DEMANDED VA PHASE A:	9,603
CONNECTED VA PHASE B:	9,239	DEMANDED VA PHASE B:	10,126
CONNECTED VA PHASE C:	10,211	DEMANDED VA PHASE C:	10,211

	CONNECTED	D.F.	DEMAND		
LIGHTING LOAD:	93	1.25	116	DEMAND LOAD (A) =	83
RECEPTACLE (FIRST 10 KVA)	540	1.00	540	SPARE CAPACITY (A) =	67
RECEPTACLE (REMAINDER)	0	0.50	0	SPARE CAPACITY (%) =	45%
LARGEST MOTOR:	7094	1.25	8868		
REMAINING MOTORS:	15180	1.00	15180	PHASE BALANCE	
APPLIANCES:	0	1.00	0	A TO B	95%
EQUIPMENT/SUBFED:	5236	1.00	5236	B TO C	99%
CONTINUOUS:	0	1.25	0	C TO A	94%
TOTAL:	28143		29940		
LOAD (AMPS):	78.1		83.1		

ABBREVIATION DESIGNATIONS FOR OTHER LOAD CLASSIFICATIONS
E = EQUIPMENT S = SUB FEED PANEL
C = CONTINUOUS A = APPLIANCE
NOTES:

EQUIPMENT SCHEDULE

KEY	ITEM	HP	FLA/MCA	KW	EQUIV. LOAD (VA)	VOLTS	PH	FEEDERS CONDUCTORS	CONDUIT	DISCONNECT DISC SW	FUSE	NEMA STARTER SIZE	CONNECTION CORD & PLUG	HARDWIRED W/ DISCONNECT	CIRCUIT BREAKER SIZE	NOTES
AD-1A	AIR DRYER		5		600	120	1	2 # 12, 1 # 12 G	3/4	STO	-	-	JBOX	-	-	3
AD-1B	AIR DRYER		5		600	120	1	2 # 12, 1 # 12 G	3/4	STO	-	-	JBOX	-	-	3
AD-1C	AIR DRYER		5		600	120	1	2 # 12, 1 # 12 G	3/4	STO	-	-	JBOX	-	-	3
CA-1	AIR COMPRESSOR - 7.5HP	7.5	34.1		7093	208	1	2 # 6, 1 # 10 G	3/4	60A/2P	50	3	-	60A/2P W/50A FUSES	50A/2P	2,3,5
CA-2A	AIR COMPRESSOR - 5HP	5	23.5		4888	208	1	2 # 8, 1 # 10 G	3/4	60A/2P	40	2	-	60A/2P W/40A FUSES	40A/2P	2,3,5
CA-2B	AIR COMPRESSOR - 5HP	5	23.5		4888	208	1	2 # 8, 1 # 10 G	3/4	60A/2P	40	2	-	60A/2P W/40A FUSES	40A/2P	2,3,5
FC-1	VARIABLE SPEED FLOW CONTROLLER		3.5		420	120	1	2 # 12, 1 # 12 G	3/4	STO	-	-	NEMA 5-20R	-	20A/1P	1,3,4

GENERAL NOTES:
1. **ALL EQUIPMENT WITH RECEPTACLE CONNECTIONS SHALL HAVE GFCI PROTECTION.**
2. **ELECTRICAL CONTRACTOR SHALL UTILIZE WATER TIGHT CONDUIT, WIRE AND CONNECTIONS TO CONNECT ALL EQUIPMENT.**
3. **CONTRACTOR SHALL COORDINATE ROUGH-IN HEIGHT AND LOCATION OF ALL DEVICES WITH FACILITIES MANAGER AND/OR EQUIPMENT PROVIDER PRIOR TO ROUGH-IN.**
4. **VERIFY INDIVIDUAL EQUIPMENT CONNECTIONS AND DISCONNECT MOUNTING LOCATIONS WITH EQUIPMENT LAYOUT, ARCHITECTURAL ELEVATIONS, EQUIPMENT INSTALLER SHOP DRAWINGS, ETC. PRIOR TO ROUGH-IN AND INSTALLATION TO AVOID CONFLICTS. DO NOT LOCATE DISCONNECTS OR OTHER DEVICES (OTHER THAN JUNCTION BOX CONNECTIONS OR CORD AND PLUG RECEPTACLES) BEHIND EQUIPMENT.**
5. **PROVIDE SUFFICIENT FLEX CONDUIT FROM DISCONNECTS TO EQUIPMENT SO EQUIPMENT CAN BE MOVED FOR CLEANING AND MAINTENANCE PURPOSES. SUPPORT CONDUIT AS REQUIRED.**
6. **RECEPTACLES TO BE NEMA SIZED AND RATED FOR EQUIPMENT PROVIDED.**
7. **PROVIDE SWITCHES, JUNCTION BOXES, RECEPTACLES, COVERPLATES, WIRING PLUG AND CORDS, ETC... AS INDICATED AND REQUIRED FOR FINAL CONNECTIONS TO EQUIPMENT. VERIFY AND COORDINATE REQUIREMENTS WITH SPECIFICATIONS, SHOP DRAWINGS AND INDIVIDUAL EQUIPMENT MANUFACTURER. CONDUIT STUBS THROUGH FLOORS SHALL BE LOCATED AND INSTALLED TO AVOID AND PREVENT DAMAGE FROM PORTABLE EQUIPMENT.**
8. **VERIFY POWER REQUIREMENTS FOR EACH PIECE OF EQUIPMENT PRIOR TO ROUGH-IN.**

NOTES:
1. **CONTRACTOR SHALL VERIFY THE RECEPTACLE AND PLUG CONFIGURATION OF EQUIPMENT PRIOR TO ROUGH-IN.**
2. **EQUIPMENT SHALL BE HARDWIRED. IF EQUIPMENT IS EQUIPPED WITH A UNIT SWITCH MEETING THE REQUIREMENTS OF ARTICLE 422 OF THE NATIONAL ELECTRICAL CODE, A DISCONNECT SWITCH IS NOT REQUIRED. IF THE EQUIPMENT DOES NOT HAVE A UNIT SWITCH, THE CONTRACTOR SHALL PROVIDE AND INSTALL A DISCONNECT SWITCH SIZED TO MEET THE NATIONAL ELECTRIC CODE. PROVIDE FUSE TYPE AND AMPACITY IN DISCONNECT AS RECOMMENDED BY EQUIPMENT MANUFACTURER AS REQUIRED.**
3. **CONTRACTOR SHALL COORDINATE ALL ELECTRICAL POWER AND CONNECTION REQUIREMENTS WITH MANUFACTURER PRIOR TO ROUGH-IN.**
4. **PROVIDE STEP DOWN TRANSFORMERS TO PUMP AND HOSE REEL AS REQUIRED. COORDINATE ALL REQUIREMENTS AND CONNECTIONS WITH MANUFACTURER.**
5. **MOTOR STARTER PROVIDED BY OWNER.**

GENERAL NOTES

(THIS SHEET)

1. REFER TO ELECTRICAL FLOOR PLANS FOR PANEL LOCATIONS.
2. ALL EQUIPMENT IS NEW UNLESS OTHERWISE NOTED.
3. INFORMATION ON THIS SHEET WAS OBTAINED FROM FIELD SURVEY OBSERVATIONS AND RECORD DRAWINGS. THE DRAWINGS REPRESENT INFORMATION AS ACCURATE AS POSSIBLE. CONTRACTOR SHALL BE RESPONSIBLE FOR VERIFYING ALL EXISTING CONDITIONS PRIOR TO BID. NOTIFY ENGINEER IMMEDIATELY IF ACTUAL FIELD CONDITIONS DIFFER FROM INFORMATION INDICATED ON THE DRAWINGS.
4. ALL NEW DEVICES IN EXISTING GEAR SHALL BE UL LISTED FOR THE EQUIPMENT, BE OF THE SAME MANUFACTURER AND WITHSTAND RATING.
5. ITEMS SHOWN IN THIN DASHED LIGHT LINEWEIGHT ARE EXISTING TO REMAIN. ITEMS SHOWN IN THICK BLACK LINEWEIGHT ARE NEW.
6. CONTRACTOR SHALL CONTACT UTILITY COMPANY TO COORDINATE ELECTRICAL WORK. COORDINATE AND VERIFY EXISTING ELECTRICAL SERVICE AND TRANSFORMER ARE OF ADEQUATE CAPACITY TO ACCOMMODATE NEW WORK. COORDINATE WITH OWNER/GC PRIOR TO BID.
7. CONTRACTOR IS RESPONSIBLE FOR SUBMITTING UTILITY APPLICATION TO UTILITY COMPANY.
8. NOTIFY ENGINEER IMMEDIATELY IF INSTALLED UTILITY TRANSFORMER DIFFERS FROM TRANSFORMER SIZE AND/OR TYPE NOTED ON ONE-LINE OR FAULT CURRENT CALCULATIONS.

KEY NOTES (#)

(THIS SHEET)

1. COORDINATE METER AND DISCONNECT REQUIREMENTS WITH LOCAL UTILITY AND VERIFY WITH BUILDING OWNER/ELECTRICAL CONTRACTOR THAT METER AND DISCONNECT HAVE BEEN INSTALLED IN ACCORDANCE WITH LOCAL UTILITY REQUIREMENTS.
2. REFER TO BONDING SCHEDULE FOR ADDITIONAL INFORMATION. CONNECT GROUNDING INDICATED TO ALL AVAILABLE POINTS.
3. UPSIZE FEEDERS FOR VOLTAGE DROP SUCH THAT VOLTAGE DROP AT LOAD CENTERS DOES NOT EXCEED 2%. REFER TO VOLTAGE DROP CALCULATIONS.
4. REFER TO UTILITY PLAN DRAWINGS FOR TRANSFORMER LOCATION.

FEEDER SCHEDULE

MARK	COPPER CONDUCTORS AND CONDUIT	ALUMINUM CONDUCTOR AND CONDUIT
	4 WIRE PLUS GROUND	**4 WIRE PLUS GROUND**
150A4	4 #1/0, 1 #6 GND-2" C	4 #3/0, 1 #4 GND-2" C
	4 WIRE SERVICE	**4 WIRE SERVICE**
150S4	4 #1/0 - 1 1/2" C	4 #3/0, 2" C
150S4V	4 250 KCMIL - 2 1/2" C	4 #4/0, 2" C
200S4	4 #3/0 - 2" C	4 250 KCMIL, 2 1/2" C

COPPER GROUNDING SCHEDULE

SERVICE SIZE	GROUNDING NOTES, SEE BELOW. (1)	(2)	(3)	(4)	(5)
150A	4	6	4	4	6
200A	4	6	4	4	6

GROUNDING NOTES:
(1) ALTERNATING-CURRENT GROUNDING ELECTRODE CONDUCTOR (NEC 250.66)
(2) STEEL GROUND ROD, 5/8" X 8' COPPER CLAD (NEC 250.66.A)-PROVIDE #6, OR AS NOTED IF EXTENDING TO OTHER TYPES OF ELECTRODES REQUIRING LARGER CONDUCTOR, SPRINKLER/GAS/ ETC PIPE (NEC 250-104.B)
PROVIDE SUPPLEMENTAL ELECTRODE AS REQUIRED PER NEC 250.53.
(3) STRUCTURAL STEEL (NEC 250-104.C), COLD WATER PIPE (NEC 250.104.A)
(4) CONCRETE ENCASED ELECTRODE - UFER (NEC 250.66.B)
(5) BONDING FOR COMMUNICATION SYSTEMS (NEC 250.94)

GENERAL NOTES:
1. IF EXACT SERVICE SIZE IS NOT LISTED, USE NEXT AMPERAGE SIZE UP.
2. NEC REFERENCES ARE FROM NEC 2020.
3. BONDS SHALL BE MECHANICAL TYPE. INTERIOR BONDS MAY BE EXOTHERMIC.
4. BOND SIZE SHALL MATCH CONDUCTORS SHOWN ON FEEDER SCHEDULE.
5. GROUND CONDUCTORS SHALL BE STRANDED COPPER INSULATED CABLE, UON.

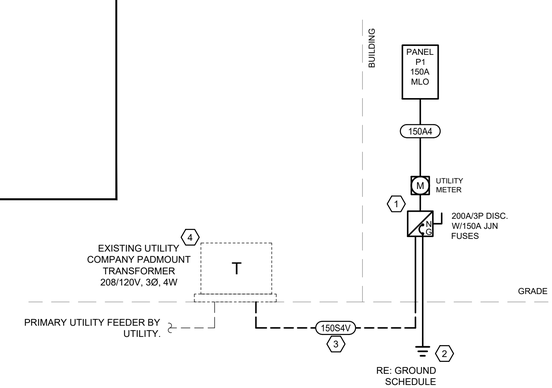

1 ELECTRICAL ONE-LINE DIAGRAM
SCALE: NO SCALE

Released for Permit
08/01/2023 4:53:26 PM
Pikes Peak Regional Building Department
shelby
ELECTRICAL

Ramirez, Johnson, & Associates
3301 Lawrence St. Ste 2
Denver, CO 80205
P: 720.598.0774

JUST ARCHITECTURE & DESIGN
PHONE: (720) 323-1493
email: kyle@justarchitectureanddesign.com
9815 Westbury Ct, Highlands Ranch, CO 80129

COLORADO LICENSED THERESA W. GRAY 41315 02/17/2023 PROFESSIONAL ENGINEER
STAMP

PROSPECT LAKE EQUIPMENT BUILDING
PROSPECT LAKE, COLORADO SPRINGS, CO

#	DATE	ISSUE
1	2-20-23	1ST PERMIT
2		
3		
4		
5		
6		

PROJECT NUMBER: 23-001
DRAWN BY: SCA
CHECKED BY: TWG

ALL INSTRUMENTS OF SERVICE, ALL DESIGNS, IDEAS AND INFORMATION SHOWN ON THESE DRAWINGS ARE AND SHALL REMAIN THE PROPERTY OF JUST ARCHITECTURE & DESIGN, LTD. NO PART THEREOF SHALL BE COPIED, DISCLOSED TO OTHERS, OR USED IN CONNECTION WITH ANY PROJECT OTHER THAN THE SPECIFIC PROJECT FOR WHICH THEY HAVE BEEN PREPARED WITHOUT THE WRITTEN CONSENT OF JUST ARCHITECTURE & DESIGN, LTD. VISUAL CONTACT WITH THESE DRAWINGS SHALL CONSTITUTE CONCLUSIVE EVIDENCE OF ACCEPTANCE OF THESE RESTRICTIONS

ONE-LINE DIAGRAM & SCHEDULES

E004

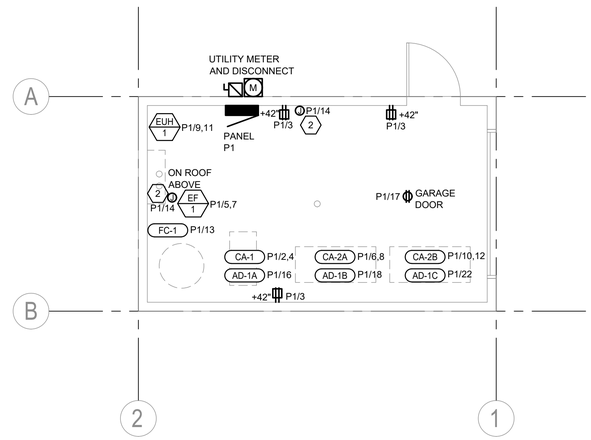

1 ELECTRICAL POWER PLAN

SCALE: 1/4" = 1'-0"

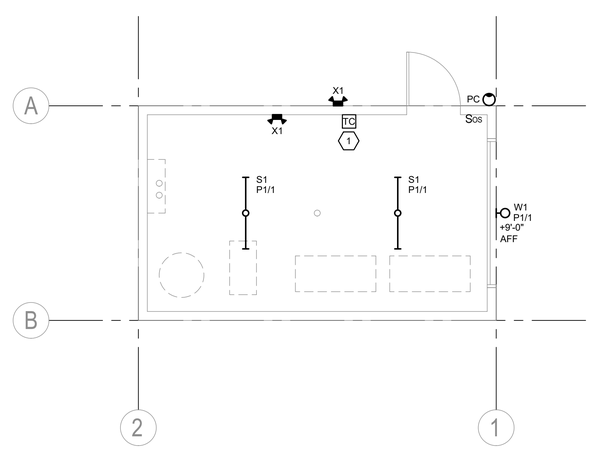

2 ELECTRICAL LIGHTING PLAN

SCALE: 1/4" = 1'-0"

GENERAL NOTES (THIS SHEET)

1. SEE SHEET E0.0 FOR LEGEND AND ADDITIONAL GENERAL NOTES.
2. CONFIRM MOUNTING HEIGHT AND LOCATION OF ALL LUMINAIRES AND DEVICES WITH ARCHITECT PRIOR TO ROUGH-IN. REFER TO ARCHITECTURAL ELEVATIONS AND REFLECTED CEILING PLANS.
3. CONNECT ALL EXIT SIGNS AHEAD OF LOCAL SWITCHING.
4. ALL CEILING MOUNTED OCCUPANCY SENSORS AND VACANCY SENSORS SHALL BE DUAL TECHNOLOGY TYPE.
5. COORDINATE LUMINAIRE LOCATIONS WITH MECHANICAL PIPING, DUCTWORK, ETC. TO AVOID CONFLICTS. SEE SPECIFICATIONS FOR COORDINATION REQUIREMENTS.
6. FIELD COORDINATE EXACT LOCATIONS OF CEILING MOUNTED OCCUPANCY SENSORS AND VACANCY SENSORS PER MANUFACTURER'S INSTRUCTIONS. THE LOCATIONS OF THE SENSORS ON DRAWINGS ARE DIAGRAMMATIC. DO NOT LOCATE OCCUPANCY SENSORS WITHIN THREE FEET OF AN HVAC SUPPLY DEVICE. IF ADDITIONAL SENSORS ARE NEEDED FOR COMPLETE COVERAGE OF SPACE THEY SHALL BE PROVIDED AND INSTALLED BY THE CONTRACTOR AS REQUIRED TO PROVIDE COMPLETE SPACE COVERAGE.
7. CONTRACTOR SHALL PROVIDE ALL NECESSARY SWITCH PACKS FOR OCCUPANCY SENSORS TO PROVIDE FUNCTION INDICATED.
8. ALL EXIT SIGNS SHALL BE CIRCUITED TO LIGHTING CIRCUIT SERVING OTHER LUMINAIRES IN THE SAME SPACE AS THE EXIT SIGNS.
9. LOSS OF UTILITY POWER SHALL ENERGIZE ALL EGRESS LIGHTING. THE DESIGN SHALL MEET ALL UL STANDARDS FOR LIFE SAFETY REQUIREMENTS.
10. VACANCY/OCCUPANCY SENSORS SHALL BE SET AT A MAXIMUM 15 MINUTE TIMEOUT.
11. MAKE ALL FINAL ELECTRICAL CONNECTIONS TO EQUIPMENT REQUIRING ELECTRICAL CONNECTION. THIS SHALL INCLUDE BUT NOT BE LIMITED TO ALL MECHANICAL AND OTHER EQUIPMENT INCLUDED IN THIS PROJECT. DEVICES AND EQUIPMENT SHOWN IN THIN LIGHT LINEWEIGHT AND/OR LABELED WITH ND (E) ARE EXISTING TO REMAIN. DEVICES AND EQUIPMENT SHOWN IN THICK BOLD LINEWEIGHT ARE NEW.
12. PROVIDE FUSES SIZED PER EQUIPMENT MANUFACTURER'S REQUIREMENTS.
13. DISCONNECT SWITCH LOCATIONS ARE SHOWN DIAGRAMMATICALLY AND SHALL BE INSTALLED IN ACCESSIBLE LOCATION TO SUIT EQUIPMENT AND SPACE. DISCONNECT SWITCHES SHALL BE WITHIN SIGHT OF THE EQUIPMENT THEY SERVE AND MOUNTED AT 6'-3" MAXIMUM, TO TOP OF CABINET. MAINTAIN NEC WORK SPACE AND REQUIREMENTS.
14. COORDINATE AND VERIFY EXACT MOUNTING LOCATIONS OF WALL AND FLOOR DEVICES WITH ARCHITECTURAL ELEVATIONS, AND ANY FURNITURE OR SPECIALTY EQUIPMENT SUPPLIER DRAWINGS PRIOR TO ROUGH-IN.
15. COORDINATE EXACT REQUIREMENTS AND LOCATIONS OF MECHANICAL EQUIPMENT WITH MECHANICAL DRAWINGS AND MECHANICAL CONTRACTOR PRIOR TO ROUGH-IN.
16. CONTRACTOR RESPONSIBLE FOR CONNECTION OF OWNER SUPPLIED EQUIPMENT MADE TO BE OPERATIONAL.
17. REFER TO TELECOM DRAWINGS AND SPECIFICATIONS FOR LOW-VOLTAGE SYSTEMS INFRASTRUCTURE REQUIREMENTS. ELECTRICAL CONTRACTOR SHALL PROVIDE ALL CONDUITS AND BACKBOXES REQUIRED FOR LOW-VOLTAGE SYSTEMS.
18. ALL GENERAL PURPOSE RECEPTACLES IN SHALL BE GFCI AND MOUNTED AT +42" AFF.
19. LOW VOLTAGE, POWER, AND LIGHTING CONDUIT WHERE STRUCTURE IS EXPOSED SHALL BE RUN ABOVE THE METAL DECK.
20. GFCI PROTECTION IS INDICATED AS REQUIRED. GFCI TRIP SWITCH SHALL BE IN ACCESSIBLE LOCATION, EITHER AT ACCESSIBLE RECEPTACLE, A REMOTE-MOUNTED GFCI SWITCH, OR AT CIRCUIT BREAKER. DO NOT PROVIDE GFCI PROTECTION IN MORE THAN ONE LOCATION.

LIGHTING CONTROLS NARRATIVE (ALL SHEETS)

1. ALL LIGHTING CONTROLS TO COMPLY WITH IECC 2015 AND LOCAL CODES.
2. BASIS OF DESIGN IS WATT STOPPER.
3. MANUFACTURER TO PROVIDE SHOP DRAWINGS INDICATING ALL LIGHTING DEVICES, ZONING, ETC. FOR REVIEW BY ENGINEER AND OWNER.
4. OCCUPANCY SENSOR CONTROL SHALL BE PROVIDED IN ALL EQUIPMENT ROOMS, STORAGE ROOMS, AND ANY ENCLOSED SPACES 300SF OR LESS.
5. ALL DAYLIGHT ZONES WITH GREATER THAN 150W OF LIGHTING TO HAVE AUTOMATIC DAYLIGHT RESPONSIVE CONTROLS (PHOTOCELL). PROVIDE SECONDARY DAYLIGHT ZONE WHERE INDICATED.
6. PROVIDE TIMECLOCK TO CONTROL EXTERIOR LIGHTING.
7. LIGHTING IN EQUIPMENT ROOMS, STORAGE ROOMS, AND ANY NON-REGULARLY OCCUPIED SPACES SHALL BE CONTROLLED VIA DUAL-TECHNOLOGY WALL-SWITCH OCCUPANCY SENSOR. PROGRAM TO MANUAL-ON, 15-MINUTE AUTO-OFF.

KEY NOTES (X) (THIS SHEET)

1. PROVIDE INTERMATIC MODEL ET2805C TIME CLOCK OR APPROVED EQUAL FOR CONTROL OF EXTERIOR LUMINAIRES. PROVIDE PHOTOCELL ON NORTH SIDE OF BUILDING. LUMINAIRES SHALL BE PHOTOCELL ON IN THE EVENING, SCHEDULED TO TURN OFF OFF AT 10:00PM, SCHEDULED TO TURN ON AT 6:00AM, PHOTOCELL OFF IN MORNING. COORDINATE ON/OFF TIMES WITH OWNER.
2. PROVIDE 120V CONNECTION TO MOTORIZED DAMPER. COORDINATE EXACT LOCATION AND REQUIREMENTS WITH MECHANICAL DRAWINGS PRIOR TO ROUGH-IN.

Released for Permit
08/01/2023 4:53:32 PM
Pikes Peak REGIONAL Building Department
shelby
ELECTRICAL

Ramirez, Johnson, & Associates
3301 Lawrence St. Ste 2
Denver, CO 80205
P: 720.598.0774

JUST ARCHITECTURE & DESIGN
PHONE: (720) 323-1493
email: kyle@justarchitectureanddesign.com
9815 Westbury Ct. Highlands Ranch, CO 80129

COLORADO LICENSED
THERESA W. GRAY
41315
02/17/2023
PROFESSIONAL ENGINEER

STAMP

PROSPECT LAKE EQUIPMENT BUILDING

PROSPECT LAKE, COLORADO SPRINGS, CO

#	DATE	ISSUE
1	2-20-23	1ST PERMIT
2		
3		
4		
5		
6		

PROJECT NUMBER: 23-001
DRAWN BY: SCA
CHECKED BY: TWG

ALL INSTRUMENTS OF SERVICE, ALL DESIGNS, IDEAS AND INFORMATION SHOWN ON THESE DRAWINGS ARE AND SHALL REMAIN THE PROPERTY OF JUST ARCHITECTURE & DESIGN, LTD. NO PART THEREOF SHALL BE COPIED, DISCLOSED TO OTHERS, OR USED IN CONNECTION WITH ANY PROJECT OTHER THAN THE SPECIFIC PROJECT FOR WHICH THEY HAVE BEEN PREPARED WITHOUT THE WRITTEN CONSENT OF JUST ARCHOITECTURE & DESIGN, LTD. VISUAL CONTACT WITH THESE DRAWINGS SHALL CONSTITUTE CONCLUSIVE EVIDENCE OF ACCEPTANCE OF THESE RESTRICTIONS

LIGHTING AND POWER PLAN

E101

Geotechnical Engineering Report

Prospect Lake Pump House
Prospect Lake
Colorado Springs, Colorado

April 21, 2022

Terracon Project No. 23225015

Prepared for:

EcoResource Solutions Inc.
Arvada, Colorado

Prepared by:

Terracon Consultants, Inc.
Colorado Springs, Colorado

Released for Permit
10/06/2023 9:03:17 AM
Pikes Peak REGIONAL Building Department
Christineh
CONSTRUCTION

April 21, 2022

EcoResource Solutions Inc.
5765 Olde Wadsworth Blvd.
Arvada, Colorado 80002

Attn: Mr. Jack Pritchett
P: 720-974-4075
E: jpritchett@eoresourcesolutions.com

Re: Geotechnical Engineering Report
Prospect Lake Pump House
Prospect Lake
Colorado Springs, Colorado
Terracon Project No. 23225015

Mr. Pritchett:

We have completed the Geotechnical Engineering services for the above referenced project. This study was performed in general accordance with Terracon Proposal No. P23225015 dated February 16, 2022. This report presents the findings of the subsurface exploration and provides geotechnical recommendations concerning earthwork and the design and construction of foundations and floor slabs for the proposed project.

We appreciate the opportunity to be of service to you on this project. If you have any questions concerning this report or if we may be of further service, please contact us.

Sincerely,
Terracon Consultants, Inc.

COLORADO LICENSED
SCOTT B. MYERS
33822
4/21/2022
PROFESSIONAL ENGINEER

Will Modrall
Geotechnical Department Manager

Scott B. Myers, P.E.
Regional Senior Consultant

REPORT TOPICS

REPORT COVER PAGE 1
REPORT COVER LETTER TO SIGN 1
REPORT TOPICS 1
REPORT SUMMARY I
INTRODUCTION 1
SITE CONDITIONS 1
PROJECT DESCRIPTION 2
GEOTECHNICAL CHARACTERIZATION 3
Subsurface Profile 3
Groundwater Conditions 3
GEOTECHNICAL OVERVIEW 4
Expansive Soils and Bedrock 4
EARTHWORK 4
Site Preparation 4
Material Types 5
Compaction Requirements 6
Excavation 7
Grading and Drainage 7
Earthwork Construction Considerations 8
FOUNDATION RECOMMENDATIONS 8
Thickened Edge Slab-on-grade Foundation Recommendations 9
SEISMIC CONSIDERATIONS 10
SLABS-ON-GRADE 10
CORROSIVITY 11
GENERAL COMMENTS 12

Note: This report was originally delivered in a web-based format. Orange Bold text in the report indicates a referenced section heading. The PDF version also includes hyperlinks which direct the reader to that section and clicking on the *GeoReport* logo will bring you back to this page. For more interactive features, please view your project online at client.terracon.com.

FIGURES

GEOMODEL

ATTACHMENTS

EXPLORATION AND TESTING PROCEDURES
SITE LOCATION AND EXPLORATION PLANS
EXPLORATION RESULTS
SUPPORTING INFORMATION

Note: Refer to each individual Attachment cover page for a listing of contents.

REPORT SUMMARY

Topic [1]	Overview Statement [2]
Project Description	The proposed project consists of the construction of single-story pump house structure with an approximate footprint of 900 square feet. No below grade levels will be constructed for the proposed pump house.
Geotechnical Characterization	Subsurface conditions encountered in the exploratory boring consisted of native sand soils with varying amounts of clay to a depth of about 2 feet underlain by claystone bedrock to the maximum depth explored of about 20 feet. Based on our experience in the area and results of our laboratory testing, the native sand has low expansion potential while the claystone bedrock has moderate expansion potential. Groundwater was not encountered to the maximum depth explored of about 20 feet.
Earthwork	Due to the presence of expansive claystone bedrock, overexcavation of claystone bedrock below shallow foundations is recommended. The resulting excavation should be filled with a low permeability controlled low strength material (CLSM), prior to the construction of new shallow foundations.
Shallow Foundations	Based on the subsurface conditions encountered in the exploratory boring, it is our opinion, the proposed pump house may be constructed on a shallow foundation system, provided the owner is willing to accept the associated risk of movement. If the owner cannot accept the risk of movement associated with a shallow foundation system, the proposed pump house should be constructed on a drilled pier foundation system.
General Comments	This section contains important information about the limitations of this geotechnical engineering report.

1. If the reader is reviewing this report as a pdf, the topics above can be used to access the appropriate section of the report by simply clicking on the topic itself.
2. This summary is for convenience only. It should be used in conjunction with the entire report for design purposes.

Geotechnical Engineering Report

Prospect Lake Pump House
Prospect Lake
Colorado Springs, Colorado

Terracon Project No. 23225015
April 21, 2022

INTRODUCTION

This report presents the results of our subsurface exploration and geotechnical engineering services performed for the proposed Prospect Lake pump house to be located at Prospect Lake in Colorado Springs, Colorado. The purpose of these services is to provide information and geotechnical engineering recommendations relative to:

- Subsurface soil conditions
- Groundwater levels
- Earthwork
- Drainage
- Seismic site classification
- Foundation design and construction
- Floor slab design and construction

The geotechnical engineering Scope of Services for this project included the advancement of one exploratory boring (designated as Boring No. B-1) to a depth of about 20 feet below existing site grades. Plans showing the site and boring location are shown in the **Site Location and Exploration Plans** section. The results of the laboratory testing performed on soil and bedrock samples obtained from the site during the field exploration are included on the boring logs and as separate graphs in the **Exploration Results** section.

SITE CONDITIONS

The following description of site conditions is derived from our site visit in association with the field exploration and our review of publicly available geologic and topographic maps.

Item	Description
Parcel Information	The project is located on the north side of Prospect Lake in Colorado Springs, Colorado. Approximate Latitude/Longitude: 38.8268° N, 104.7986° W See **Site Location**
Existing Improvements	The site is currently undeveloped land with a paved walking trail located to the northeast. The northern shoreline of Prospect Lake is located about 20 feet to the southwest of the proposed pump house.

Item	Description
Current Ground Cover	Earthen, light to moderate vegetation and barren ground.
Existing Topography	The ground surface in the vicinity of the proposed pump house is generally flat with an elevation difference of less than about 4 feet.

PROJECT DESCRIPTION

Our initial understanding of the project was provided in our proposal and was discussed during project planning. A period of collaboration has transpired since the project was initiated, and our final understanding of the project conditions is as follows:

Item	Description
Information Provided	Our understanding of the project comes from: ■ Email correspondence on February 11, 2022 ■ Client provided 30'x30' Prospect Lake Pump House Location.kml file
Project Description	The proposed project consists of the construction of single-story shed structure with an approximate footprint of 900 square feet.
Building Construction	We anticipate that the building will be of wood-framed construction and anticipate that it will be supported on a thickened edge slab-on-grade.
Maximum Loads (assumed)	■ Walls: 1 to 2 kips ■ Slabs: 100 to 150 pounds per square foot (psf)
Finished Floor Elevation	Anticipated to be within 2 feet of existing site grades.
Grading/Slopes	Up to 2 feet of cut/fill is anticipated to develop final grades. Final slope angles no steeper than 3H:1V (Horizontal: Vertical) up to 5 feet in height are assumed.
Below-Grade Structures	None reported as part of site development.
Free-Standing Retaining Walls	None reported as part of site development.
Pavements	None reported as part of site development.

GEOTECHNICAL CHARACTERIZATION

We have developed a general characterization of the subsurface conditions based upon our review of the subsurface exploration, laboratory data, geologic setting, and our understanding of the project. This characterization, termed GeoModel, forms the basis of our geotechnical calculations and evaluation of site preparation and foundation options. Conditions encountered at the exploration point are indicated on the individual boring log. The individual boring log can be found in the **Exploration Results** section and the GeoModel can be found in the **Figures** section of this report. As noted in **General Comments**, the characterization is based upon one exploration point at the site, and variations are likely outside of the exploration point.

Subsurface Profile

As part of our analyses, we identified the following model layers within the subsurface profile. For a more detailed view of the model layer depths at each boring location, refer to the GeoModel.

Model Layer	Layer Name	General Description
1	**Native Sand**	Native sand soil with varying amounts of clay; loose
2	**Bedrock**	Bedrock consisting of claystone; soft to hard

Stratification boundaries on the boring log represent the approximate location of changes in soil and material types; in situ, the transition between materials may be gradual. Further details of the boring can be found on the boring log in the **Exploration Results**.

Based on our experience in the area and results of our laboratory testing, the native sand has low expansion potential while the claystone bedrock has moderate expansion potential. A summary of laboratory test results is included in the **Exploration Results**.

Groundwater Conditions

The boring was observed while drilling and upon completion of drilling for the presence and level of groundwater. The water levels encountered in the borehole can be found on the boring log in **Exploration Results**, and are summarized below.

Boring No.	Shallowest depth to groundwater encountered while or upon completion of drilling [1]
B-1	None encountered

1. Due to safety concerns, the boring was backfilled immediately after completion. Therefore, subsequent groundwater measurements were not obtained.

These observations represent groundwater conditions at the time of the field exploration, and may not be indicative of other times or at other locations. Groundwater levels can be expected to fluctuate with varying seasonal and weather conditions.

Groundwater level fluctuations occur due to seasonal variations in the amount of rainfall, runoff, and other factors not evident at the time the boring was performed. Groundwater levels during construction or at other times in the life of the structure may be higher or lower than the levels indicated on the boring logs. The possibility of groundwater level fluctuations should be considered when developing the design and construction plans for the project.

GEOTECHNICAL OVERVIEW

Based on subsurface conditions encountered in the exploratory boring, the site appears suitable for the proposed construction from a geotechnical point of view provided certain precautions and design and construction recommendations outlined in this report are followed. We have identified geotechnical conditions that could impact design and construction of the proposed pump house.

Expansive Soils and Bedrock

Based on our experience in the area and results of our laboratory testing, the native sand has low expansion potential while the claystone bedrock has moderate expansion potential.

This report provides recommendations to help mitigate the effects of soil and bedrock shrinkage and expansion. However, even if these procedures are followed, some movement and cracking in the building and slabs-on-grade should be anticipated. The severity of cracking and other damage such as uneven floor slabs will probably increase if any modification of the site results in excessive wetting or drying of the expansive soils and bedrock. Eliminating the risk of movement and distress is generally not feasible, but it may be possible to further reduce the risk of movement if significantly more expensive measures are used during construction. It is imperative the recommendations outlined in the **Grading and Drainage** subsection of **Earthwork** in this report be followed to reduce movement.

EARTHWORK

The following presents recommendations for site preparation, excavation, subgrade preparation, and placement of engineered fills on the project. All earthwork on the project should be observed and evaluated by Terracon.

Site Preparation

Strip and remove existing vegetation, organics, and other deleterious materials from proposed building area. All exposed surfaces should be free of mounds and depressions that could prevent uniform compaction.

Stripped materials consisting of vegetation, unsuitable fills, and organic materials should be wasted from the site or used to revegetate landscaped areas or exposed slopes after completion of grading operations.

Where possible, the site should be initially graded to create a relatively level surface to receive fill or a low permeability controlled low strength material (CLSM) and to provide for a relatively uniform thickness of fill or CLSM beneath the proposed building and improvement areas. Low permeability controlled low strength material (CLSM) must be placed within 24 hours of completing the recommended overexcavation. In areas where fill is placed, it is imperative the moisture content of prepared materials be protected from moisture loss.

Although evidence of underground facilities such as a large utility vault was not observed during our exploration, such features could be encountered during construction. If unexpected fills or underground facilities are encountered, such features should be removed and the excavation thoroughly cleaned prior to backfill placement and/or construction.

It is anticipated that excavations for the proposed construction can be accomplished with conventional earthmoving equipment.

Depending upon depth of excavation and seasonal conditions, surface water may be encountered in excavations on the site. Surface water seeping into excavations at this site could most likely be controlled by shallow trenches leading to a sump pit where the water could be removed by pumping.

Material Types

Fill for this project should consist of engineered fill. Engineered fill is fill that meets the criteria presented in this report and has been properly documented.

Engineered fill should meet the following material property requirements:

Fill Type [1,2]	USCS Classification	Acceptable location for placement
On-site sand soils [3,4]	SC	On-site sand soils are considered suitable for reuse as compacted fill below slabs-on-grade and as general fill for this project.
Low permeability controlled low strength material (CLSM)	None	An approved low permeability controlled low strength material (CLSM) is acceptable below shallow foundations.
Imported soils	Varies	Imported soils meeting the gradation outlined herein can be considered acceptable for use as engineered fill beneath slabs and pavements.

Fill Type [1,2]	USCS Classification	Acceptable location for placement

1. Controlled, compacted fill should consist of approved materials that are free of organic matter and debris. Frozen material should not be used, and fill should not be placed on a frozen subgrade. A sample of each material type should be submitted to the Geotechnical Engineer for evaluation.
2. Care should be taken during the fill placement process to avoid zones of dis-similar fill. Improvements constructed over varying fill types are at a higher risk of differential movement compared to improvements over a uniform fill zone.

Imported soils for engineered fill (if required) should meet the following material property requirements:

Gradation	Percent finer by weight (ASTM C136)
3”	100
No. 4 Sieve	50-100
No. 200 Sieve	>50

- Liquid Limit ..... 30 (max)
- Plasticity Index ..... 15 (max)
- Maximum Expansive Potential (%) 1.0*

*Measured on a sample compacted to approximately 95 percent of the ASTM D698 maximum dry density at optimum water content. The sample is confined under a 500-psf surcharge and submerged.

Compaction Requirements

Engineered fill should be placed and compacted in horizontal lifts, using equipment and procedures that will produce recommended moisture contents and densities throughout the lift.

Item	Description
Fill lift thickness	8-inches or less in loose thickness when heavy, self-propelled compaction equipment is used 4 to 6-inches in loose thickness when hand-guided equipment (i.e. jumping jack, plate compactor) is used
Compaction requirements [1,2]	Minimum of 95% of the material’s standard Proctor maximum dry density (ASTM D698)
Moisture content cohesive soils (clay soils) [3]	+1 to +4% of the optimum moisture content, with an average daily moisture content of at least +2%
Moisture content cohesionless soils (sand soils)	-2 to +2% of the optimum moisture content

1. We recommend that engineered fill be tested for water content and compaction during placement. Should the results of the in-place density tests indicate the specified water or compaction limits have not been met, the area represented by the test should be reworked and retested as required until the specified water and compaction requirements are achieved.

Item	Description
2.	Water levels should be maintained low enough to allow for satisfactory compaction to be achieved without the compacted fill material pumping when proofrolled.
3.	Moisture conditioned clay soils should not be allowed to dry out. A loss of moisture within these materials could result in an increase in the materials expansive potential. Subsequent wetting of these materials could result in undesirable movement.

Excavation

Excavations into the subsurface soils and bedrock will encounter a variety of conditions. The individual contractor(s) is responsible for designing and constructing stable, temporary excavations as required to maintain stability of both the excavation sides and bottom. All excavations should be sloped or shored in the interest of safety following local and federal regulations, including current Occupational Safety and Health Administration (OSHA) excavation and trench safety standards.

Soils and bedrock penetrated by the proposed excavations may vary significantly across the site. The soil and bedrock classifications are based solely on the materials encountered in the exploratory boring. The contractor should verify that similar conditions exist throughout the proposed area of excavation. If different subsurface conditions are encountered at the time of construction, the actual conditions should be evaluated to determine any excavation modifications necessary to maintain safe conditions.

Grading and Drainage

All grades must be adjusted to provide positive drainage away from the building during construction and maintained throughout the life of the proposed project. Infiltration of water into utility or foundation excavations must be prevented during construction. Landscaped irrigation adjacent to the foundation systems should be minimized or eliminated. Water permitted to pond near or adjacent to the perimeter of the structure (either during or post-construction) can result in significantly higher soil movements than those discussed in this report. As a result, any estimations of potential movement described in this report cannot be relied upon if positive drainage is not obtained and maintained, and water is allowed to infiltrate the fill and/or subgrade.

Permanent grades should be sloped at a minimum of 10 percent grade for at least 10 feet beyond the perimeter of the building. Asphalt pavement or concrete flatwork should be sloped at a minimum of 2 percent beyond the building perimeters for the life of the building. Where Americans with Disabilities Act (ADA) or other requirements or existing site features limit the gradient, slopes on the order of ½ to 1 percent minimum may be necessary to comply with the ADA, but do increase the risk of unanticipated movement. Backfill against footings, exterior walls, and in utility and sprinkler line trenches should be compacted in accordance with recommendations in this report and free of all construction debris to reduce the possibility of water infiltration. After building construction and prior to project completion, we recommend that verification of final grading be performed to document that positive drainage, as described above, has been achieved.

Where paving or flatwork abuts the structure, care should be taken that joints are properly sealed and maintained to prevent the infiltration of surface water.

Landscape or xeriscape areas within 10 feet of the foundation systems shall not be hindered by landscape edging, grade variations, or vegetation. In addition, consideration should be given to snow removal practices that will minimize the stockpiling of snow in planter and landscaped areas adjacent to structural improvements.

Planters located adjacent to the structure should be watertight. Sprinkler mains and spray heads should be located a minimum of 10 feet away from the building lines. Roof drains should be extended away from the structure a minimum of 10 feet through the use of splash blocks or downspout extensions.

Trees or other vegetation whose root systems have the ability to remove excessive moisture from the subgrade and foundation soils should not be planted next to the building. Trees and shrubbery should be kept away from the exterior edges of foundations, a distance at least equal to their expected mature height.

Earthwork Construction Considerations

Upon completion of grading operations, care should be taken to maintain the moisture content of the subgrade prior to construction of slabs-on-grade, pavements, etc. Construction traffic over prepared subgrade should be minimized and avoided to the extent practical. Subsequent wetting of these materials will result in undesirable movement.

The site should also be graded to prevent ponding of surface water on prepared subgrade or in excavations. In areas where water is allowed to pond over a period of time, the affected area should be removed and allowed to dry out. If constraints do not allow for the materials to dry out, the affected area should be overexcavated and replaced with engineered fill. As an alternative, geotextiles could also be considered as a stabilization technique.

The Geotechnical Engineer should be retained during the construction phase of the project to observe earthwork and to perform necessary tests and observations during overexcavation operations, excavations, subgrade preparation; proof-rolling; placement and compaction of controlled compacted fills; backfilling of excavations into the completed subgrade, and just prior to construction of building floor slabs.

FOUNDATION RECOMMENDATIONS

Based upon the results of the field exploration and laboratory testing program for this exploration, the following foundation systems were evaluated for use in supporting the proposed building:

- Shallow thickened edge slab-on-grade foundation over a zone of an approved low permeability controlled low strength material (CLSM).

- Drilled piers socketed into the underlying claystone bedrock.

Based on the subsurface conditions encountered in the exploratory boring, it is our opinion, the proposed pump house may be constructed on a shallow foundation system, provided the owner is willing to accept the associated risk of movement. If the owner cannot accept the risk of movement associated with a shallow foundation system, the proposed pump house should be constructed on a drilled pier foundation system. If the owner would like to construct the proposed pump house on a drilled pier foundation system, we should be contacted to provide additional foundation recommendations.

Thickened Edge Slab-on-grade Foundation Recommendations

Design recommendations for a thickened edge slab-on-grade foundation systems are presented in the following table and paragraphs.

Description	Value
Thickness of Zone of Low Permeability CLSM [1]	Minimum of 1 foot below bottom of lowest foundation element
Lateral Extent of Zone of Low Permeability CLSM	5 feet outside building footprint
Supporting Stratum	Low Permeability CLSM
Maximum Allowable Bearing Pressure [2,3]	2,000 psf
Coefficient of Friction (Sliding)	0.3
Minimum Footing Dimensions	Thickened Edge: 12 inches
Minimum Embedment Below Finished Grade for Frost Protection [4]	3 feet
Approximate Total Movement [5]	About 1 to 1-1/2 inches
Estimated Differential Movement [5,6]	About ½ to ¾ of total movement

1. A mix design for the low permeability controlled low strength material (CLSM) should be submitted for approval prior to placement. The CLSM must be placed within 24 hours of completing the required overexcavation below the proposed foundation.
2. The recommended maximum allowable bearing pressure assumes that any lower strength soils, if encountered, will be excavated and replaced with low permeability CLSM.
3. The maximum allowable soil bearing pressure can be increased by 1/3 for transient loading conditions.
4. For footings beneath unheated areas and footings that will be exposed to freezing conditions during construction.
5. Foundation movement will depend upon the variations within the subsurface soil profile, the structural loading conditions, the embedment depth of the footings, and the quality of the earthwork operations and foundation construction.
6. Foundations should be detailed and reinforced as necessary to reduce the potential for distress caused by differential foundation movement.

Due to the presence of expansive claystone bedrock, additional foundation movements will occur if water from any source infiltrates the foundation soils; therefore, proper drainage should be provided in the final design and during construction and throughout the life of the structure. Failure to maintain the proper drainage as recommended in the **Grading and Drainage** section of **Earthwork** will nullify the movement estimates provided above.

If unstable subgrade conditions develop, these conditions should be observed by the Geotechnical Engineer to assess the subgrade and provide suitable alternatives for stabilization. Stabilized areas should be approved by the Geotechnical Engineer prior to continuing construction.

SEISMIC CONSIDERATIONS

Based on our subsurface exploration and laboratory testing, it is our opinion that the soils have a low risk of liquefaction. The following table presents the seismic site classification based on the 2015 International Building Code (IBC), and the subsurface conditions encountered within the boring:

Code Used	Site Classification
2015 International Building Code (IBC) [1,2]	C

1. In general accordance with the 2015 International Building Code, Section 1613.3.2.
2. The 2015 International Building Code (IBC) requires a site subsurface profile determination extending a depth of 100 feet for seismic site classification. The current scope requested does not include the required 100-foot subsurface profile determination. The boring of this exploration extended to a maximum depth of about 20 feet and this seismic site class definition considers that similar subsurface conditions exist below the maximum depth of the subsurface exploration.

SLABS-ON-GRADE

The interior floor system of the proposed pump house will be integral with the thickened edge slab-on-grade foundation. However, we anticipate exterior slabs-on-grade may be constructed as part the overall development of the site. We anticipate slabs-on-grade will be constructed on the native clayey sand soils underlain by the expansive claystone bedrock. Based on our experience, we believe slabs-on-grade constructed on the native sand soils will have a qualitatively low risk of movement. The risk of movement for slabs-on-grade at this site will significantly increase, if final grades are such that slabs-on-grade are constructed directly on the expansive claystone bedrock.

Conventional slab-on-grade construction over expansive claystone bedrock, whether in its natural state or moisture-conditioned and recompacted to a certain depth, will move. The severity and magnitude of movement will depend on the distance between the slabs-on-grade and the

expansive claystone, the resulting expansion potential of the claystone, and the circumstances causing future wetting.

To improve performance of slabs-on-grade, we recommend the native sand soils be scarified to a depth of at least 12 inches, moisture conditioned and compacted. If new fill is placed below slabs-on-grade, new fill materials should be placed and compacted as outlined in the **Earthwork** section of this report.

For structural design of concrete slabs-on-grade, a modulus of subgrade reaction of 100 pounds per cubic inch (pci) may be used for point or limited area loads.

Additional slab-on-grade design and construction recommendations are as follows:

- Positive separations and/or isolation joints should be provided between slabs and foundations, to allow independent movement.
- Control joints should be provided in slabs to control the location and extent of cracking.
- Slabs-on-grade should not be constructed on frozen subgrade.
- Other design and construction considerations, as outlined in Section 302.1R of the ACI Design Manual, are recommended.

Movements of slab-on-grades using the above outlined technique will likely be reduced and tend to be more uniform. Additional movement could occur should the subsurface soils and bedrock become wetted to significant depths, which could result in potential excessive movement causing uneven slabs-on-grade and severe cracking. This could be due to over watering of landscaping, poor drainage, and/or broken utility lines. Therefore, it is imperative that the recommendations outlined in this section and in the **Grading and Drainage** subsection of **Earthwork** be followed.

CORROSIVITY

The following table lists the results of laboratory water-soluble sulfate testing performed on samples obtained during our field exploration. These values may be used to estimate potential corrosive characteristics of the on-site soils with respect to contact with the various underground materials which will be used for project construction.

Boring No.	Sample Depth (feet)	Water-Soluble Sulfate [1] (%)
B-1	1 – 5	<0.10

1. Results of water-soluble sulfate testing indicate that the sample of the on-site soils has an exposure class of S0 when classified in accordance with Table 19.3.1.1 of the American Concrete Institute (ACI) Design Manual. The results of the testing indicate ASTM Type I Portland Cement is suitable for project concrete in contact with on-site soils. However, if there is no (or minimal) cost differential, use of ASTM Type II Portland Cement is recommended for additional sulfate resistance of construction concrete. Concrete should be designed in accordance with the provisions of the ACI Design Manual, Section 318, Chapter 19.

GENERAL COMMENTS

Our analysis and opinions are based upon our understanding of the project, the geotechnical conditions in the area, and the data obtained from our site exploration. Natural variations will occur between exploration point locations or due to the modifying effects of construction or weather. The nature and extent of such variations may not become evident until during or after construction. Terracon should be retained as the Geotechnical Engineer, where noted in this report, to provide observation and testing services during pertinent construction phases. If variations appear, we can provide further evaluation and supplemental recommendations. If variations are noted in the absence of our observation and testing services on-site, we should be immediately notified so that we can provide evaluation and supplemental recommendations.

Our Scope of Services does not include either specifically or by implication any environmental or biological (e.g., mold, fungi, bacteria) assessment of the site or identification or prevention of pollutants, hazardous materials, or conditions. If the owner is concerned about the potential for such contamination or pollution, other studies should be undertaken.

Our services and any correspondence or collaboration through this system are intended for the sole benefit and exclusive use of our client for specific application to the project discussed and are accomplished in accordance with generally accepted geotechnical engineering practices with no third-party beneficiaries intended. Any third-party access to services or correspondence is solely for information purposes to support the services provided by Terracon to our client. Reliance upon the services and any work product is limited to our client, and is not intended for third parties. Any use or reliance of the provided information by third parties is done solely at their own risk. No warranties, either express or implied, are intended or made.

Site characteristics as provided are for design purposes and not to estimate excavation cost. Any use of our report in that regard is done at the sole risk of the excavating cost estimator as there may be variations on the site that are not apparent in the data that could significantly impact excavation cost. Any parties charged with estimating excavation costs should seek their own site characterization for specific purposes to obtain the specific level of detail necessary for costing. Site safety, and cost estimating including, excavation support, and dewatering requirements/design are the responsibility of others. If changes in the nature, design, or location of the project are planned, our conclusions and recommendations shall not be considered valid unless we review the changes and either verify or modify our conclusions in writing.

FIGURES

Contents:

GeoModel

GEOMODEL

Prospect Lake Pump House ■ Colorado Springs, Colorado
April 21, 2022 ■ Terracon Project No. 23225015

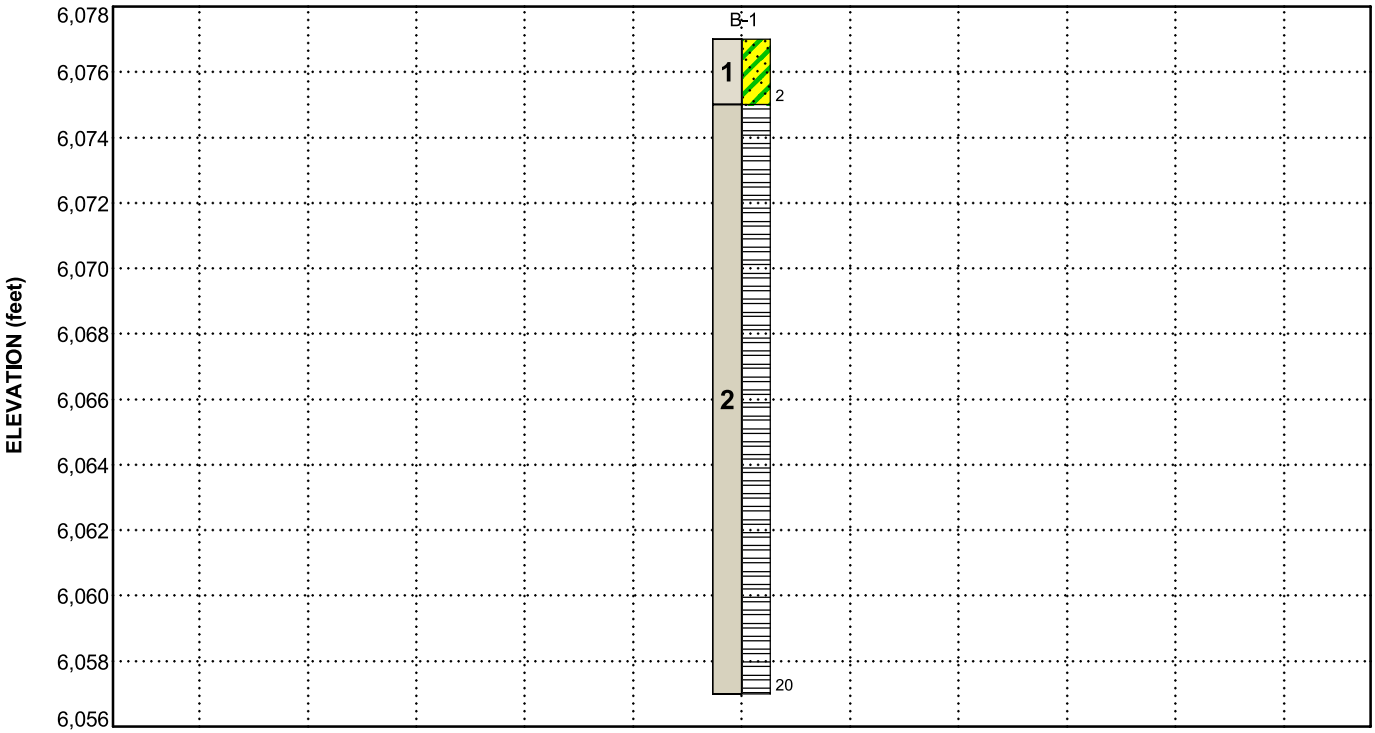

This is not a cross section. This is intended to display the Geotechnical Model only. See individual logs for more detailed conditions.

Model Layer	Layer Name	General Description
1	**Native Sand**	Native sand soil with varying amounts of clay; loose
2	**Bedrock**	Bedrock consisting of claystone; soft to hard

LEGEND

Clayey Sand

Claystone

NOTES:
Layering shown on this figure has been developed by the geotechnical engineer for purposes of modeling the subsurface conditions as required for the subsequent geotechnical engineering for this project.
Numbers adjacent to soil column indicate depth below ground surface.

ATTACHMENTS

EXPLORATION AND TESTING PROCEDURES

Field Exploration

Boring Layout and Elevations: The location of the boring is presented in the **Site Location and Exploration Plans**. The boring was located in the field by using a handheld, recreational-grade GPS unit. The accuracy of the latitude and longitude values is typically about +/- 10 feet when obtaining the values using this method. The elevation at the boring was obtained from Google Earth. The accuracy of the boring location and elevation should only be assumed to the level implied by the methods used.

Subsurface Exploration Procedures: The boring was drilled with a Dietrich D90 truck-mounted with solid-stem augers. During the drilling operations, a lithologic log of the boring was recorded by the field engineer. Relatively undisturbed samples were obtained at selected intervals utilizing a 3-inch outside diameter modified Dames and Moore ring sampler. Bulk samples were obtained from auger cuttings. Penetration resistance values were recorded in a manner similar to the standard penetration test (SPT). This test consists of driving the sampler into the ground with a 140-pound hammer free falling through a distance of 30 inches. The number of blows required to advance the barrel sampler 12 inches (18 inches for standard split-spoon samplers, final 12 inches are recorded) or the interval indicated is recorded and can be correlated to the standard penetration resistance value (N-value). The blow count values are indicated on the boring logs at the respective sample depths, barrel sampler blow counts are not considered N-values.

An automatic hammer was used to advance the samplers in the boring performed at this site. A greater efficiency is typically achieved with the automatic hammer compared to the conventional safety hammer operated with a cathead and rope. Published correlations between the SPT values and soil properties are based on the lower efficiency cathead and rope method. This higher efficiency affects the standard penetration resistance blow count value by increasing the penetration per hammer blow over what would be obtained using the cathead and rope method. The effect of the automatic hammer's efficiency has been considered in the interpretation and analysis of the subsurface information for this report.

The standard penetration test provides a reasonable indication of the in-place density of sandy type materials, but only provides an indication of the relative stiffness of cohesive materials since the blow count in these soils may be affected by the soils moisture content. In addition, considerable care should be exercised in interpreting the N-values in gravelly soils, particularly where the size of the gravel particle exceeds the inside diameter of the sampler.

Groundwater measurements were obtained in the boring at the time of drilling. Due to safety concerns, the boring was backfilled with auger cuttings after drilling. Some settlement of the backfill may occur and should be repaired as soon as possible.

Laboratory Testing

Samples retrieved during the field exploration were returned to the laboratory for observation by the Geotechnical Engineer, and were classified in general accordance with the Unified Soil Classification System presented in the **Supporting Information**.

At this time, an applicable laboratory-testing program was formulated to determine engineering properties of the subsurface materials. Following the completion of the laboratory testing, the field descriptions were confirmed or modified as necessary, and the boring logs were prepared. The boring logs are included in the **Exploration Results**.

Laboratory test results are included in the **Exploration Results**. These results were used for the geotechnical engineering analyses and the development of foundation and earthwork. All laboratory tests were performed in general accordance with the applicable local or other accepted standards.

Selected soil and bedrock samples were tested for the following engineering properties:

- Water content
- Dry density
- Grain size distribution
- Atterberg limits
- Swell/consolidation
- Water-soluble sulfate content

SITE LOCATION AND EXPLORATION PLANS

Contents:

Site Location Plan
Exploration Plan with Aerial Image

Note: All attachments are one page unless noted above.

SITE LOCATION

Prospect Lake Pump House ■ Colorado Springs, Colorado
April 21, 2022 ■ Terracon Project No. 23225015

DIAGRAM IS FOR GENERAL LOCATION ONLY, AND IS NOT INTENDED FOR CONSTRUCTION PURPOSES

TOPOGRAPHIC MAP IMAGE COURTESY OF THE U.S. GEOLOGICAL SURVEY QUADRANGLES INCLUDE: COLORADO SPRINGS, CO (1/1/1994).

EXPLORATION PLAN WITH AERIAL IMAGE

Prospect Lake Pump House ■ Colorado Springs, Colorado
April 21, 2022 ■ Terracon Project No. 23225015

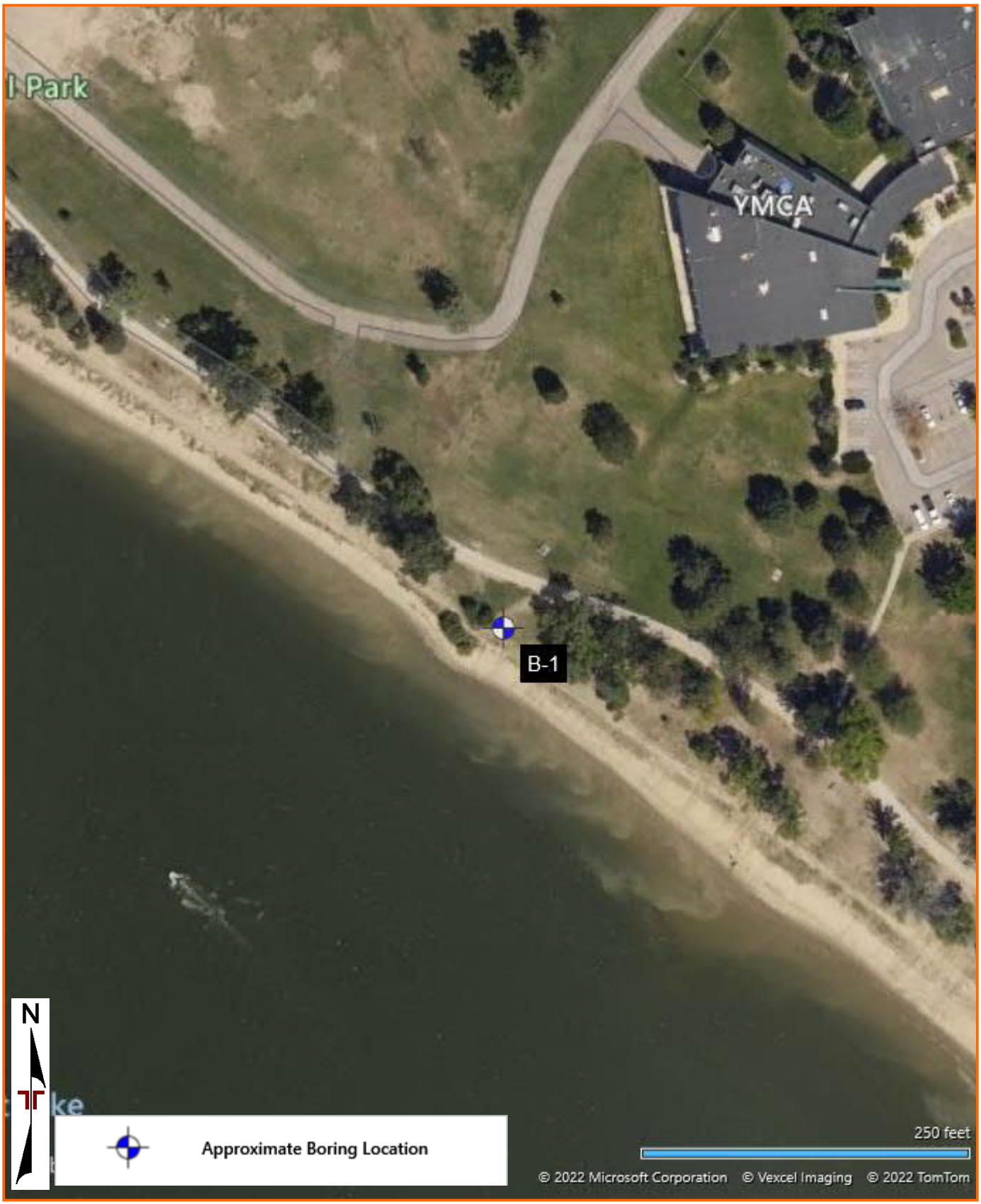

DIAGRAM IS FOR GENERAL LOCATION ONLY, AND IS NOT INTENDED FOR CONSTRUCTION PURPOSES

AERIAL PHOTOGRAPHY PROVIDED BY MICROSOFT BING MAPS

EXPLORATION RESULTS

Contents:

Boring Logs (Boring No. 1)
Swell Consolidation Test (2 pages)
Grain Size Distribution
Summary of Laboratory Test Results

Note: All attachments are one page unless noted above.

BORING LOG NO. B-1

PROJECT: Prospect Lake Pump House

CLIENT: EcoResource Solutions Inc.

SITE: Prospect Lake
Colorado Springs, Colorado

LOCATION See Exploration Plan

Latitude: 38.8268° Longitude: -104.7986°

Approximate Surface Elev.: 6077 (Ft.) +/-

MODEL LAYER	GRAPHIC LOG	DEPTH	ELEVATION (Ft.)	DEPTH (Ft.)	WATER LEVEL OBSERVATIONS	SAMPLE TYPE	FIELD TEST RESULTS	SWELL (%)	WATER CONTENT (%)	DRY UNIT WEIGHT (pcf)	ATTERBERG LIMITS LL-PL-PI	PERCENT FINES
1		**CLAYEY SAND (SC)**, fine to medium grained, brown, loose					5-6		16.8	92	39-20-19	19
		2.0	6075+/-									
2		**CLAYSTONE**, gray, soft to hard					8-9		11.6		39-18-21	66
							11-19	+3.2 @ 500 psf	16.2	103		
				5								
							21-29		17.1	105		
							20-29	+3.6 @ 500 psf	17.7	110		
				10								
							17-33		18.2	108		
				15								
		20.0	6057+/-				21-34		18.4	107		
		Boring Terminated at 20 Feet		20								

Stratification lines are approximate. In-situ, the transition may be gradual.

Hammer Type: Automatic

Advancement Method:
4-inch diameter solid stem continuous flight power auger

Abandonment Method:
Boring backfilled with auger cuttings upon completion.

See Exploration and Testing Procedures for a description of field and laboratory procedures used and additional data (If any).

See Supporting Information for explanation of symbols and abbreviations.

Elevation was interpolated from Google Earth.

Notes:

WATER LEVEL OBSERVATIONS

Groundwater not encountered

Terracon
4172 Center Park Dr
Colorado Springs, CO

Boring Started: 03-09-2022 | Boring Completed: 03-09-2022

Drill Rig: Dietrich D90 | Driller: GDI

Project No.: 23225015

THIS BORING LOG IS NOT VALID IF SEPARATED FROM ORIGINAL REPORT. GEO SMART LOG-NO WELL 23225015 PROSPECT LAKE PUM.GPJ TERRACON_DATATEMPLATE.GDT 4/20/22

SWELL CONSOLIDATION TEST

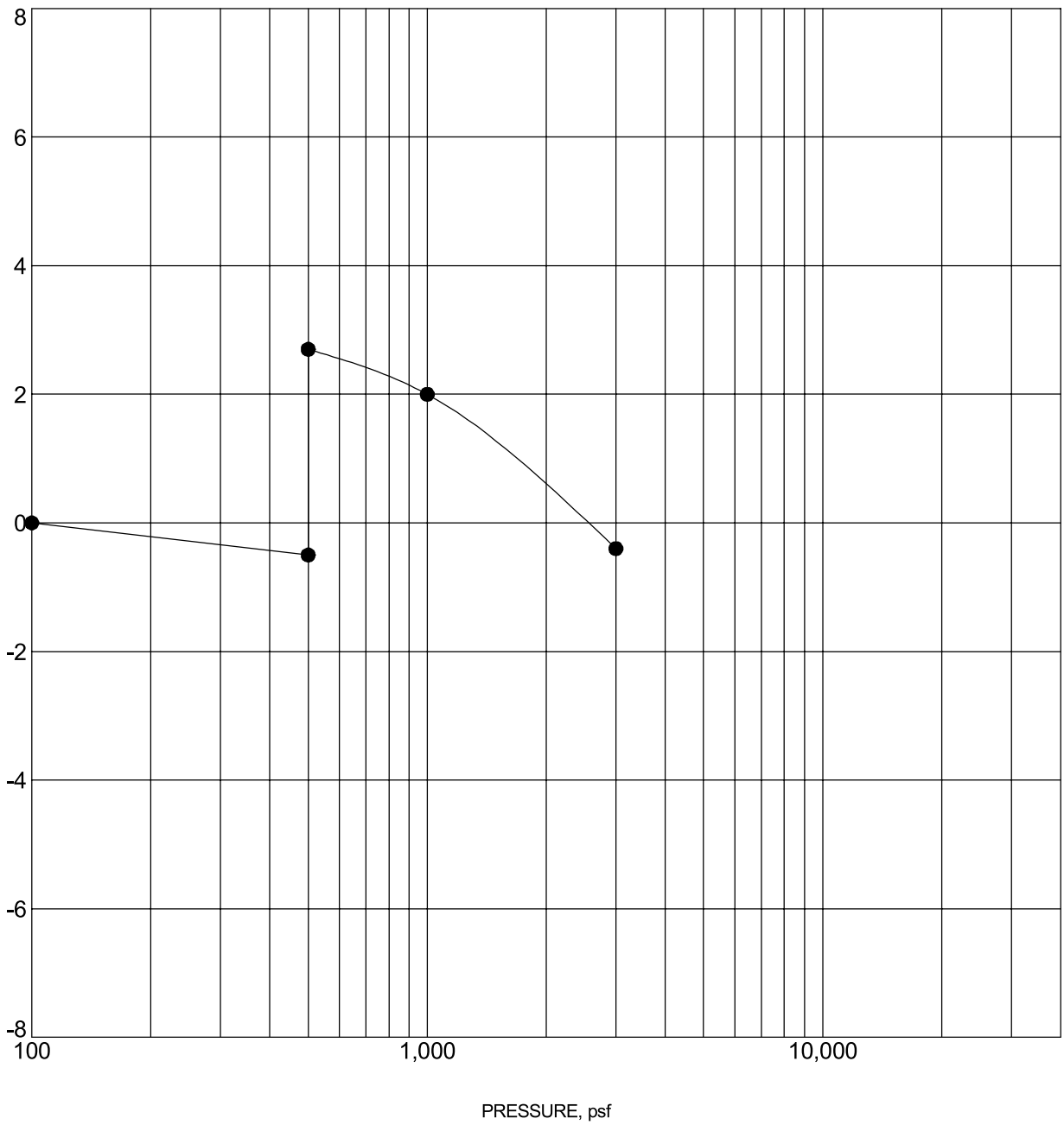

Specimen Identification			Classification	γ_d, pcf	WC, %
●	B-1	4 - 5 ft	CLAYSTONE	103	16.2

NOTES: Water added at 500 psf

PROJECT: Prospect Lake Pump House

SITE: Prospect Lake
Colorado Springs, Colorado

Terracon
4172 Center Park Dr
Colorado Springs, CO

PROJECT NUMBER: 23225015

CLIENT: EcoResource Solutions Inc.

LABORATORY TESTS ARE NOT VALID IF SEPARATED FROM ORIGINAL REPORT. TC_CONSOL_STRAIN-USCS-NO ASTM 23225015 PROSPECT LAKE PUM.GPJ TERRACON_DATATEMPLATE.GDT 4/20/22

SWELL CONSOLIDATION TEST

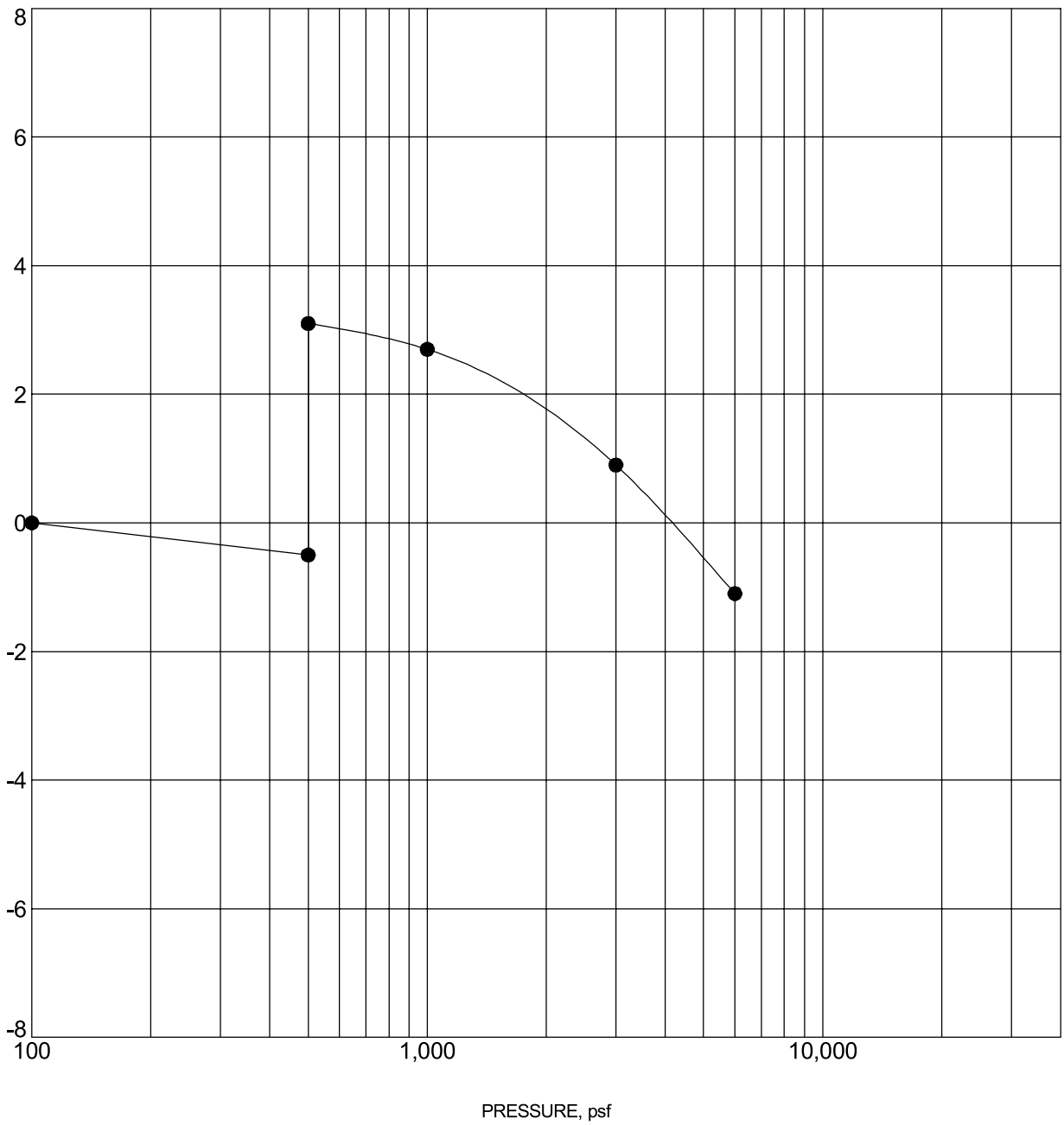

Specimen Identification			Classification	γ_d, pcf	WC, %
●	B-1	9 - 10 ft	CLAYSTONE	110	17.7

NOTES: Water added at 500 psf

PROJECT: Prospect Lake Pump House

SITE: Prospect Lake
Colorado Springs, Colorado

Terracon
4172 Center Park Dr
Colorado Springs, CO

PROJECT NUMBER: 23225015

CLIENT: EcoResource Solutions Inc.

LABORATORY TESTS ARE NOT VALID IF SEPARATED FROM ORIGINAL REPORT. TC_CONSOL_STRAIN-USCS-NO ASTM 23225015 PROSPECT LAKE PUM.GPJ TERRACON_DATATEMPLATE.GDT 4/20/22

GRAIN SIZE DISTRIBUTION

ASTM D422 / ASTM C136

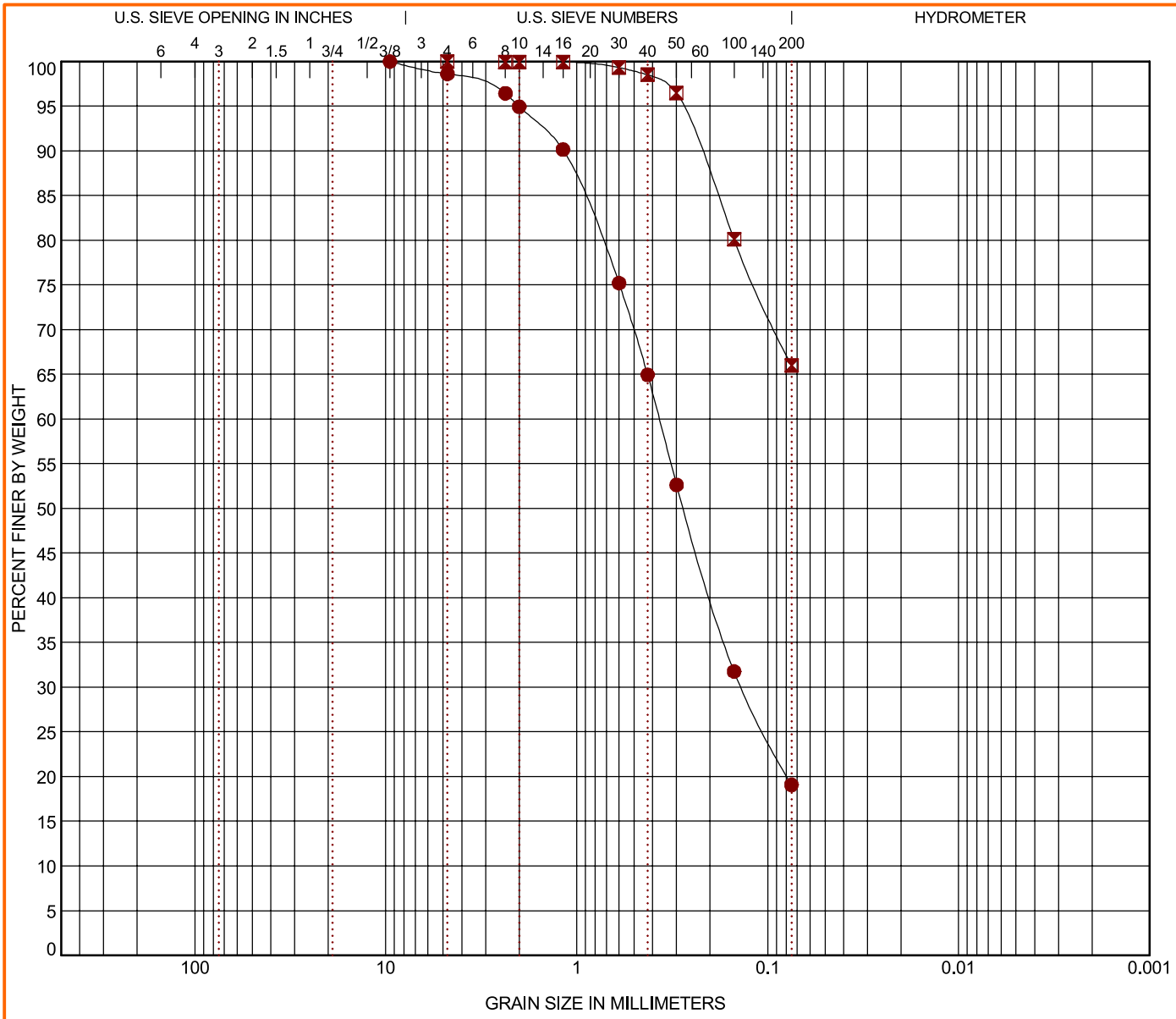

COBBLES	GRAVEL		SAND			SILT OR CLAY
	coarse	fine	coarse	medium	fine	

	Boring ID	Depth	USCS Classification	AASHTO Classification	WC (%)	LL	PL	PI	Cc	Cu
●	B-1	0 - 1	CLAYEY SAND (SC)	A-2-6 (0)	16.8	39	20	19		
⊠	B-1	2 - 3	SANDY LEAN CLAY (CL)	A-6 (12)	11.6	39	18	21		

	Boring ID	Depth	D_{100}	D_{60}	D_{30}	D_{10}	%Gravel	%Sand	%Silt	%Fines	%Clay
●	B-1	0 - 1	9.5	0.37	0.136		1.4	79.5		19.1	
⊠	B-1	2 - 3	4.75				0.0	34.0		66.0	

PROJECT: Prospect Lake Pump House

PROJECT NUMBER: 23225015

SITE: Prospect Lake
Colorado Springs, Colorado

Terracon
4172 Center Park Dr
Colorado Springs, CO

CLIENT: EcoResource Solutions Inc.

LABORATORY TESTS ARE NOT VALID IF SEPARATED FROM ORIGINAL REPORT. GRAIN SIZE: USCS & AASHTO DESC COMBINED 23225015 PROSPECT LAKE PUM.GPJ TERRACON_DATATEMPLATE.GDT 4/20/22

SUMMARY OF LABORATORY TEST RESULTS

Prospect Lake Pump House - Colorado Springs, Colorado

Terracon Project No. 23225015

Boring No.	Depth (ft)	USCS Class.	Initial Water Content (%)	Initial Dry Density (pcf)	Swell/Consolidation		Particle Size Distribution, Percent Passing by Weight					Atterberg Limits		Water Soluble Sulfates (%)	Remarks
					Surcharge (ksf)	Swell (%)	3/4"	#4	#10	#40	#200	LL	PI		
B-1	0	SC	16.8	92			100	99	95	65	19	39	19		4
B-1	1 - 5													<0.10	
B-1	2		11.6				100	100	100	99	66	39	21		4
B-1	4		16.2	103	0.5	+3.2									3,4
B-1	7		17.1	105											4
B-1	9		17.7	110	0.5	+3.6									3,4
B-1	14		18.2	108											4
B-1	19		18.4	107											4

Notes:
Initial Dry Density and Initial Water Content are in-situ values unless otherwise noted.
* = Partially disturbed sample
- = Compression/settlement
NV = no value
NP = non-plastic

Remarks:
1 Remolded Compacted density (about 95% of ASTM D698 maximum density near optimum moisture content)
2 Remolded Compacted density (about 95% of ASTM D1557 maximum density near optimum moisture content)
3 Water added to sample
4 Dry density and/or moisture content determined from one ring of a multi-ring sample
5 Minus #200 Only
6 Moisture-Density Relationship Test Method ASTM D698/AASHTO T99
7 Moisture-Density Relationship Test Method ASTM D1557/AASHTO T180

Terracon GeoReport

SUPPORTING INFORMATION

Contents:

General Notes
Unified Soil Classification System

Note: All attachments are one page unless noted above.

GENERAL NOTES

DESCRIPTION OF SYMBOLS AND ABBREVIATIONS

Prospect Lake Pump House ■ Colorado Springs, Colorado

April 21, 2022 ■ Terracon Project No. 23225015

SAMPLING	WATER LEVEL	FIELD TESTS
Auger Cuttings Modified Dames & Moore Ring Sampler	**Water Initially Encountered** **Water Level After a Specified Period of Time** **Water Level After a Specified Period of Time** **Cave In Encountered** Water levels indicated on the soil boring logs are the levels measured in the borehole at the times indicated. Groundwater level variations will occur over time. In low permeability soils, accurate determination of groundwater levels is not possible with short term water level observations.	**N** Standard Penetration Test Resistance (Blows/Ft.) **(HP)** Hand Penetrometer **(T)** Torvane **(DCP)** Dynamic Cone Penetrometer **UC** Unconfined Compressive Strength **(PID)** Photo-Ionization Detector **(OVA)** Organic Vapor Analyzer

DESCRIPTIVE SOIL CLASSIFICATION

Soil classification as noted on the soil boring logs is based Unified Soil Classification System. Where sufficient laboratory data exist to classify the soils consistent with ASTM D2487 "Classification of Soils for Engineering Purposes" this procedure is used. ASTM D2488 "Description and Identification of Soils (Visual-Manual Procedure)" is also used to classify the soils, particularly where insufficient laboratory data exist to classify the soils in accordance with ASTM D2487. In addition to USCS classification, coarse grained soils are classified on the basis of their in-place relative density, and fine-grained soils are classified on the basis of their consistency. See "Strength Terms" table below for details. The ASTM standards noted above are for reference to methodology in general. In some cases, variations to methods are applied as a result of local practice or professional judgment.

LOCATION AND ELEVATION NOTES

Exploration point locations as shown on the Exploration Plan and as noted on the soil boring logs in the form of Latitude and Longitude are approximate. See Exploration and Testing Procedures in the report for the methods used to locate the exploration points for this project. Surface elevation data annotated with +/- indicates that no actual topographical survey was conducted to confirm the surface elevation. Instead, the surface elevation was approximately determined from topographic maps of the area.

STRENGTH TERMS

RELATIVE DENSITY OF COARSE-GRAINED SOILS (More than 50% retained on No. 200 sieve.) Density determined by Standard Penetration Resistance			CONSISTENCY OF FINE-GRAINED SOILS (50% or more passing the No. 200 sieve.) Consistency determined by laboratory shear strength testing, field visual-manual procedures or standard penetration resistance				BEDROCK		
Descriptive Term (Density)	**Standard Penetration or N-Value Blows/Ft.**	**Ring Sampler Blows/Ft.**	**Descriptive Term (Consistency)**	**Unconfined Compressive Strength Qu, (psf)**	**Standard Penetration or N-Value Blows/Ft.**	**Ring Sampler Blows/Ft.**	**Ring Sampler Blows/Ft.**	**Standard Penetration or N-Value Blows/Ft.**	**Descriptive Term (Consistency)**
Very Loose	0 - 3	0 - 6	Very Soft	less than 500	0 - 1	< 3	< 30	< 20	Weathered
Loose	4 - 9	7 - 18	Soft	500 to 1,000	2 - 4	3 - 4	30 - 49	20 - 29	Firm
Medium Dense	10 - 29	19 - 58	Medium Stiff	1,000 to 2,000	4 - 8	5 - 9	50 - 89	30 - 49	Medium Hard
Dense	30 - 50	59 - 98	Stiff	2,000 to 4,000	8 - 15	10 - 18	90 - 119	50 - 79	Hard
Very Dense	> 50	≥ 99	Very Stiff	4,000 to 8,000	15 - 30	19 - 42	> 119	>79	Very Hard
			Hard	> 8,000	> 30	> 42			

RELEVANCE OF SOIL BORING LOG

The soil boring logs contained within this document are intended for application to the project as described in this document. Use of these soil boring logs for any other purpose may not be appropriate.

UNIFIED SOIL CLASSIFICATION SYSTEM

Criteria for Assigning Group Symbols and Group Names Using Laboratory Tests [A]					Soil Classification	
					Group Symbol	Group Name [B]
Coarse-Grained Soils: More than 50% retained on No. 200 sieve	**Gravels:** More than 50% of coarse fraction retained on No. 4 sieve	**Clean Gravels:** Less than 5% fines [C]	Cu ≥ 4 and 1 ≤ Cc ≤ 3 [E]		GW	Well-graded gravel [F]
			Cu < 4 and/or [Cc<1 or Cc>3.0] [E]		GP	Poorly graded gravel [F]
		Gravels with Fines: More than 12% fines [C]	Fines classify as ML or MH		GM	Silty gravel [F, G, H]
			Fines classify as CL or CH		GC	Clayey gravel [F, G, H]
	Sands: 50% or more of coarse fraction passes No. 4 sieve	**Clean Sands:** Less than 5% fines [D]	Cu ≥ 6 and 1 ≤ Cc ≤ 3 [E]		SW	Well-graded sand [I]
			Cu < 6 and/or [Cc<1 or Cc>3.0] [E]		SP	Poorly graded sand [I]
		Sands with Fines: More than 12% fines [D]	Fines classify as ML or MH		SM	Silty sand [G, H, I]
			Fines classify as CL or CH		SC	Clayey sand [G, H, I]
Fine-Grained Soils: 50% or more passes the No. 200 sieve	**Silts and Clays:** Liquid limit less than 50	**Inorganic:**	PI > 7 and plots on or above "A"		CL	Lean clay [K, L, M]
			PI < 4 or plots below "A" line [J]		ML	Silt [K, L, M]
		Organic:	Liquid limit - oven dried / Liquid limit - not dried	< 0.75	OL	Organic clay [K, L, M, N]
						Organic silt [K, L, M, O]
	Silts and Clays: Liquid limit 50 or more	**Inorganic:**	PI plots on or above "A" line		CH	Fat clay [K, L, M]
			PI plots below "A" line		MH	Elastic Silt [K, L, M]
		Organic:	Liquid limit - oven dried / Liquid limit - not dried	< 0.75	OH	Organic clay [K, L, M, P]
						Organic silt [K, L, M, Q]
Highly organic soils:	Primarily organic matter, dark in color, and organic odor				PT	Peat

[A] Based on the material passing the 3-inch (75-mm) sieve.

[B] If field sample contained cobbles or boulders, or both, add "with cobbles or boulders, or both" to group name.

[C] Gravels with 5 to 12% fines require dual symbols: GW-GM well-graded gravel with silt, GW-GC well-graded gravel with clay, GP-GM poorly graded gravel with silt, GP-GC poorly graded gravel with clay.

[D] Sands with 5 to 12% fines require dual symbols: SW-SM well-graded sand with silt, SW-SC well-graded sand with clay, SP-SM poorly graded sand with silt, SP-SC poorly graded sand with clay.

[E] $Cu = D_{60}/D_{10}$ $\quad Cc = \dfrac{(D_{30})^2}{D_{10} \times D_{60}}$

[F] If soil contains ≥ 15% sand, add "with sand" to group name.

[G] If fines classify as CL-ML, use dual symbol GC-GM, or SC-SM.

[H] If fines are organic, add "with organic fines" to group name.

[I] If soil contains ≥ 15% gravel, add "with gravel" to group name.

[J] If Atterberg limits plot in shaded area, soil is a CL-ML, silty clay.

[K] If soil contains 15 to 29% plus No. 200, add "with sand" or "with gravel," whichever is predominant.

[L] If soil contains ≥ 30% plus No. 200 predominantly sand, add "sandy" to group name.

[M] If soil contains ≥ 30% plus No. 200, predominantly gravel, add "gravelly" to group name.

[N] PI ≥ 4 and plots on or above "A" line.

[O] PI < 4 or plots below "A" line.

[P] PI plots on or above "A" line.

[Q] PI plots below "A" line.

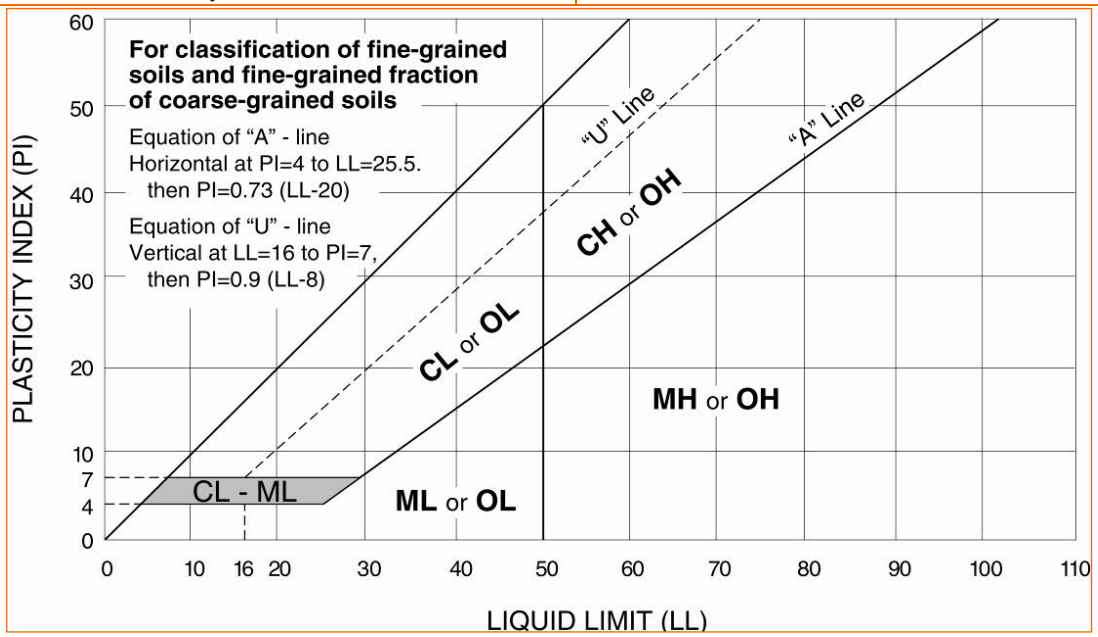

COM*check* Software Version COMcheckWeb

Envelope Compliance Certificate

Project Information

Energy Code:	2015 IECC
Project Title:	Prospect Lake Equipment Building
Location:	Colorado Springs, Colorado
Climate Zone:	5b
Project Type:	New Construction

Construction Site:
1315 E Pikes Peak Ave
Colorado SPrings, Colorado 80910

Owner/Agent:

Designer/Contractor:

Additional Efficiency Package(s)

Credits: 1.0 Required 1.0 Proposed
Reduced Lighting Power, 1.0 credit

Building Area	Floor Area
1-equipment room (Workshop) : Nonresidential	264

Envelope Assemblies

Assembly	Gross Area or Perimeter	Cavity R-Value	Cont. R-Value	Proposed U-Factor	Budget U-Factor(a)
Roof: Attic Roof, Steel Joists, [Bldg. Use 1 - equipment room]	308	21.0	30.0	0.021	0.027
Floor: Unheated Slab-On-Grade, Vertical 2 ft., [Bldg. Use 1 - equipment room] (b)	64	---	11.6	0.534	0.540
NORTH					
Ext. Wall: Steel-Framed, 16in. o.c., [Bldg. Use 1 - equipment room]	114	21.0	5.8	0.066	0.064
Door: Insulated Metal, Non-Swinging, [Bldg. Use 1 - equipment room]	56	---	---	0.220	0.179
EAST					
Ext. Wall: Steel-Framed, 16in. o.c., [Bldg. Use 1 - equipment room]	160	21.0	5.8	0.066	0.064
SOUTH					
Ext. Wall: Steel-Framed, 16in. o.c., [Bldg. Use 1 - equipment room]	114	21.0	5.8	0.066	0.064
WEST					
Ext. Wall: Steel-Framed, 16in. o.c., [Bldg. Use 1 - equipment room]	200	21.0	5.8	0.066	0.064
Door: Insulated Metal, Swinging, [Bldg. Use 1 - equipment room]	21	---	---	0.220	0.370

(a) Budget U-factors are used for software baseline calculations ONLY, and are not code requirements.
(b) Slab-On-Grade proposed and budget U-factors shown in table are F-factors.

Released for Permit
10/06/2023 9:03:23 AM
REGIONAL
Building Department
Christineh
CONSTRUCTION

Envelope PASSES: Design 1% better than code

Envelope Compliance Statement

Compliance Statement: The proposed envelope design represented in this document is consistent with the building plans, specifications, and other calculations submitted with this permit application. The proposed envelope systems have been designed to meet the 2015 IECC requirements in COM*check* Version COMcheckWeb and to comply with any applicable mandatory requirements listed in the Inspection Checklist.

Kyle Matthews		9/12/23
Name - Title	Signature	Date

Released for Permit
10/06/2023 9:03:30 AM
Pikes Peak REGIONAL Building Department
Christopher CONSTRUCTION

COM*check* Software Version COMcheckWeb

Inspection Checklist

Energy Code: 2015 IECC

Requirements: 0.0% were addressed directly in the COM*check* software

Text in the "Comments/Assumptions" column is provided by the user in the COMcheck Requirements screen. For each requirement, the user certifies that a code requirement will be met and how that is documented, or that an exception is being claimed. Where compliance is itemized in a separate table, a reference to that table is provided.

Section # & Req.ID	Plan Review	Complies?	Comments/Assumptions
C103.2 [PR1][1]	Plans and/or specifications provide all information with which compliance can be determined for the building envelope and document where exceptions to the standard are claimed.	☐Complies ☐Does Not ☐Not Observable ☐Not Applicable	
C402.4.1 [PR10][1]	The vertical fenestration area <= 30 percent of the gross above-grade wall area.	☐Complies ☐Does Not ☐Not Observable ☐Not Applicable	
C402.4.1 [PR11][1]	The skylight area <= 3 percent of the gross roof area.	☐Complies ☐Does Not ☐Not Observable ☐Not Applicable	
C402.4.2 [PR14][1]	In enclosed spaces > 2,500 ft2 directly under a roof with ceiling heights >15 ft. and used as an office, lobby, atrium, concourse, corridor, storage, gymnasium/exercise center, convention center, automotive service, manufacturing, non-refrigerated warehouse, retail store, distribution/sorting area, transportation, or workshop, the following requirements apply: (a) the daylight zone under skylights is >= half the floor area; (b) the skylight area to daylight zone is >= 3 percent with a skylight VT >= 0.40; or a minimum skylight effective aperture >= 1 percent.	☐Complies ☐Does Not ☐Not Observable ☐Not Applicable	
C406 [PR9][1]	Plans, specifications, and/or calculations provide all information with which compliance can be determined for the additional energy efficiency package options.	☐Complies ☐Does Not ☐Not Observable ☐Not Applicable	

Additional Comments/Assumptions:

Released for Permit
10/06/2023 9:03:33 AM
Pikes Peak REGIONAL Building Department
Christineh
CONSTRUCTION

1	High Impact (Tier 1)	2	Medium Impact (Tier 2)	3	Low Impact (Tier 3)

Section # & Req.ID	Footing / Foundation Inspection	Complies?	Comments/Assumptions
C303.2 [FO4][2]	Slab edge insulation installed per manufacturer's instructions.	☐Complies ☐Does Not ☐Not Observable ☐Not Applicable	
C303.2.1 [FO6][1]	Exterior insulation protected against damage, sunlight, moisture, wind, landscaping and equipment maintenance activities.	☐Complies ☐Does Not ☐Not Observable ☐Not Applicable	
C104 [FO3][2]	Installed slab-on-grade insulation type and R-value consistent with insulation specifications reported in plans and COMcheck reports.	☐Complies ☐Does Not ☐Not Observable ☐Not Applicable	*See the Envelope Assemblies table for values.*
C402.2.6 [FO12][3]	Radiant heating systems panels insulated to >=R-3.5 on face opposite space being heated.	☐Complies ☐Does Not ☐Not Observable ☐Not Applicable	*See the Envelope Assemblies table for values.*

Additional Comments/Assumptions:

Released for Permit
10/06/2023 9:03:36 AM
Pikes Peak REGIONAL Building Department
Christineh
CONSTRUCTION

1	High Impact (Tier 1)	2	Medium Impact (Tier 2)	3	Low Impact (Tier 3)

Section # & Req.ID	Framing / Rough-In Inspection	Complies?	Comments/Assumptions
C303.1.3 [FR12][2]	Fenestration products rated in accordance with NFRC.	☐Complies ☐Does Not ☐Not Observable ☐Not Applicable	
C303.1.3 [FR13][1]	Fenestration products are certified as to performance labels or certificates provided.	☐Complies ☐Does Not ☐Not Observable ☐Not Applicable	
C402.4.3 [FR10][1]	Vertical fenestration SHGC value.	☐Complies ☐Does Not ☐Not Observable ☐Not Applicable	*See the Envelope Assemblies table for values.*
C402.4.3, C402.4.3.4 [FR8][1]	Vertical fenestration U-Factor.	☐Complies ☐Does Not ☐Not Observable ☐Not Applicable	*See the Envelope Assemblies table for values.*
C402.4.4 [FR14][2]	U-factor of opaque doors associated with the building thermal envelope meets requirements.	☐Complies ☐Does Not ☐Not Observable ☐Not Applicable	*See the Envelope Assemblies table for values.*
C402.5.1.2.1 [FR19][1]	The building envelope contains a continuous air barrier that is sealed in an approved manner and material permeability <= 0.004 dfm/ft2. Air barrier penetrations are sealed in an approved manner.	☐Complies ☐Does Not ☐Not Observable ☐Not Applicable	
C402.5.2, C402.5.4 [FR18][3]	Factory-built fenestration and doors are labeled as meeting air leakage requirements.	☐Complies ☐Does Not ☐Not Observable ☐Not Applicable	
C402.5.7 [FR17][3]	Vestibules are installed on all building entrances. Doors have self-closing devices.	☐Complies ☐Does Not ☐Not Observable ☐Not Applicable	

Additional Comments/Assumptions:

Released for Permit
10/06/2023 9:03:38 AM
REGIONAL
Christineh
CONSTRUCTION

1	High Impact (Tier 1)	2	Medium Impact (Tier 2)	3	Low Impact (Tier 3)

Section # & Req.ID	Mechanical Rough-In Inspection	Complies?	Comments/Assumptions
C402.5.5, C403.2.4.3 [ME3][3]	Stair and elevator shaft vents have motorized dampers that automatically close.	☐Complies ☐Does Not ☐Not Observable ☐Not Applicable	
C402.5.5, C403.2.4.3 [ME58][3]	Outdoor air and exhaust systems have motorized dampers that automatically shut when not in use and meet maximum leakage rates. Check gravity dampers where allowed.	☐Complies ☐Does Not ☐Not Observable ☐Not Applicable	

Additional Comments/Assumptions:

Released for Permit
10/06/2023 9:03:41 AM
Pikes Peak REGIONAL Building Department
Christineh
CONSTRUCTION

1	High Impact (Tier 1)	2	Medium Impact (Tier 2)	3	Low Impact (Tier 3)

Section # & Req.ID	Insulation Inspection	Complies?	Comments/Assumptions
C303.1 [IN3][1]	Roof insulation installed per manufacturer's instructions. Blown or poured loose-fill insulation is installed only where the roof slope is <=3 in 12.	☐Complies ☐Does Not ☐Not Observable ☐Not Applicable	
C303.1 [IN10][2]	Building envelope insulation is labeled with R-value or insulation certificate providing R-value and other relevant data.	☐Complies ☐Does Not ☐Not Observable ☐Not Applicable	
C303.2 [IN7][1]	Above-grade wall insulation installed per manufacturer's instructions.	☐Complies ☐Does Not ☐Not Observable ☐Not Applicable	
C303.2.1 [IN14][2]	Exterior insulation is protected from damage with a protective material. Verification for exposed foundation insulation may need to occur during Foundation Inspection.	☐Complies ☐Does Not ☐Not Observable ☐Not Applicable	
C402.2.1 [IN17][3]	Insulation intended to meet the roof insulation requirements cannot be installed on top of a suspended ceiling. Mark this requirement compliant if insulation is installed accordingly.	☐Complies ☐Does Not ☐Not Observable ☐Not Applicable	
C104 [IN6][1]	Installed above-grade wall insulation type and R-value consistent with insulation specifications reported in plans and COMcheck reports.	☐Complies ☐Does Not ☐Not Observable ☐Not Applicable	*See the Envelope Assemblies table for values.*
C104 [IN8][2]	Installed floor insulation type and R-value consistent with insulation specifications reported in plans and COMcheck reports.	☐Complies ☐Does Not ☐Not Observable ☐Not Applicable	*See the Envelope Assemblies table for values.*
C402.2.6 [IN18][3]	Radiant panels and associated components, designed for heat transfer from the panel surfaces to the occupants or indoor space are insulated with a minimum of R-3.5.	☐Complies ☐Does Not ☐Not Observable ☐Not Applicable	
C104 [IN2][1]	Installed roof insulation type and R-value consistent with insulation specifications reported in plans and COMcheck reports. For some ceiling systems, verification may need to occur during Framing Inspection.	☐Complies ☐Does Not ☐Not Observable ☐Not Applicable	*See the Envelope Assemblies table for values.*
C402.5.1.1 [IN1][1]	All sources of air leakage in the building thermal envelope are sealed, caulked, gasketed, weather stripped or wrapped with moisture vapor-permeable wrapping material to minimize air leakage.	☐Complies ☐Does Not ☐Not Observable ☐Not Applicable	

Additional Comments/Assumptions:

Released for Permit
10/06/2023 9:03:43 AM
Pikes Peak REGIONAL Building Department
Christineh
CONSTRUCTION

1	High Impact (Tier 1)	2	Medium Impact (Tier 2)	3	Low Impact (Tier 3)

Section # & Req.ID	Final Inspection	Complies?	Comments/Assumptions
C402.5.3 [FI51][3]	Where open combustion air ducts provide combustion air to open combustion fuel burning appliances, the appliances and combustion air opening are located outside the building thermal envelope or enclosed in a room, isolated from inside the thermal envelope. Such rooms are sealed and insulated.	☐Complies ☐Does Not ☐Not Observable ☐Not Applicable	
C402.5.6 [FI37][1]	Weatherseals installed on all loading dock cargo doors.	☐Complies ☐Does Not ☐Not Observable ☐Not Applicable	
C402.5.8 [FI26][3]	Recessed luminaires in thermal envelope to limit infiltration and be IC rated and labeled. Seal between interior finish and luminaire housing.	☐Complies ☐Does Not ☐Not Observable ☐Not Applicable	

Additional Comments/Assumptions:

Released for Permit
10/06/2023 9:03:46 AM
Pikes Peak REGIONAL Building Department
Christineh
CONSTRUCTION

1	High Impact (Tier 1)	2	Medium Impact (Tier 2)	3	Low Impact (Tier 3)

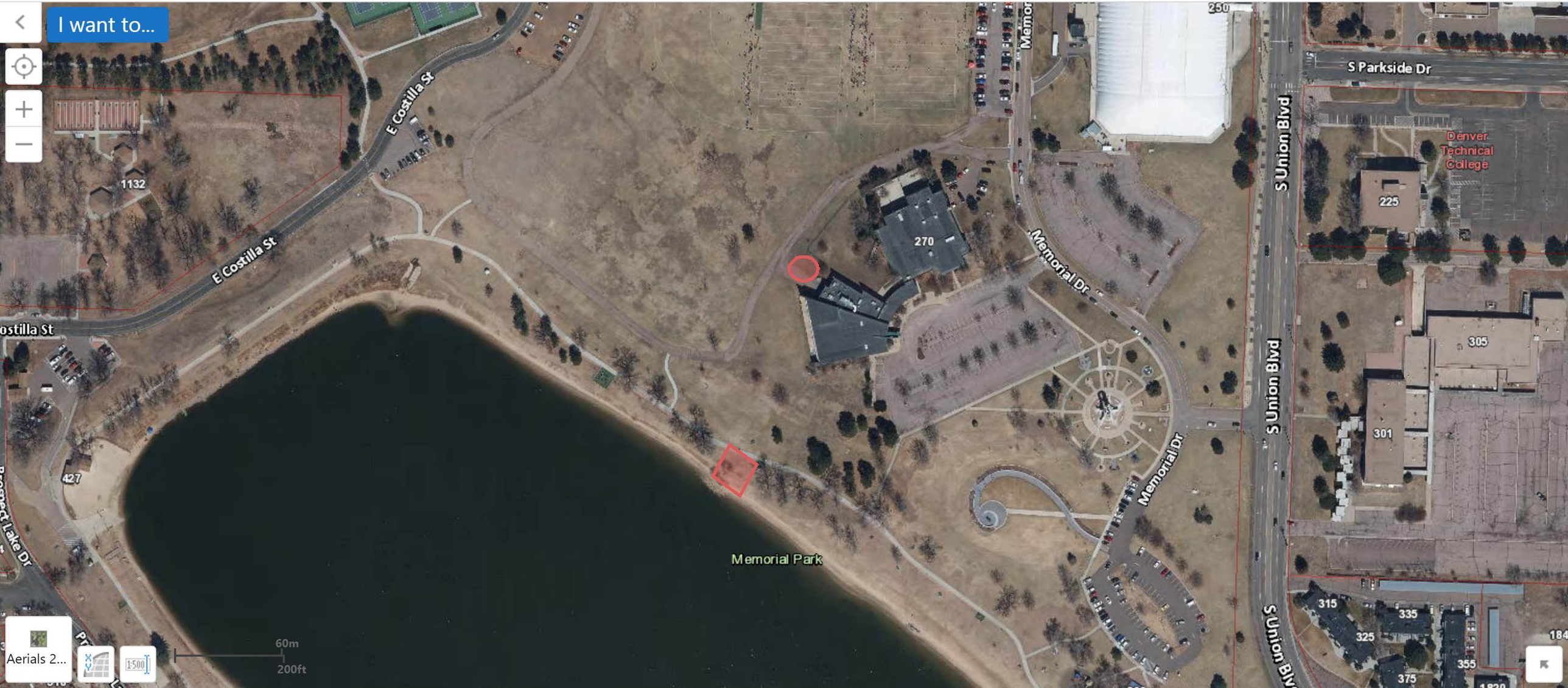
I want to...
E Costilla St
E Costilla St
ostilla St
1132
427
Prospect Lake Dr
270
Memorial Dr
Memorial Dr
Memorial Dr
Memorial Park
250
S Parkside Dr
S Union Blvd
S Union Blvd
S Union Blvd
Denver Technical College
225
305
301
315
325
335
355
375
60m
200ft
Aerials 2...